Broadcast Electronics
4100 North 24th Street, Quincy, Illinois 62305 USA • Phone (217) 224-9600 • Fax (217) 224-9607 • www.bdcast.com • bdcast@bdcast.com

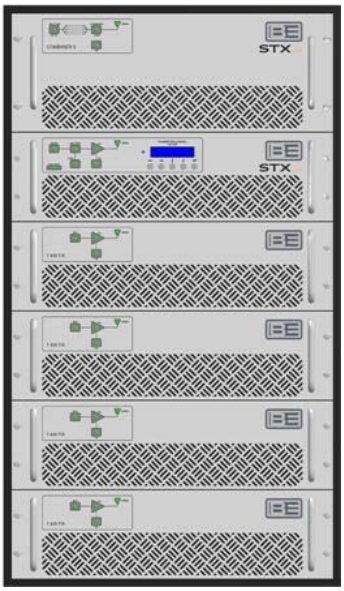

STX LP
1 kW, 2 kW, 3 kW, 5 kW
FM Transmitters
Instruction Manual

597-4102
Rev J
May 14, 2013

STX LP – 1 kW, 2 kW, 3 kW, 5 kW FM Transmitters

Instruction Manual

©2013 Broadcast Electronics. All rights reserved.

The information in this publication is subject to improvement and change without notice. Although every effort is made to ensure the accuracy of the information in this manual, Broadcast Electronics accepts no responsibility for any errors or omissions. Broadcast Electronics reserves the right to modify and improve the design and specifications of the equipment in this manual without notice. Any modifications shall not adversely affect performance of the equipment so modified.

Proprietary Notice

This document contains proprietary data of Broadcast Electronics Inc. No part of this publication may be reproduced, transmitted, transcribed, stored in a retrieval system, translated into any other language in any form or by any means, electronic or mechanical, including photocopying or recording, for any purpose, without the express written permission of Broadcast Electronics.

Trademarks

Broadcast Electronics and the BE logo are registered trademarks of Broadcast Electronics.

All other trademarks are property of their respective owners.

Broadcast Electronics
Product Warranty (Two-Year Limited)

BE hereby warrants all new products manufactured by BE against any defects in material or workmanship at the time of delivery thereof, or that develop under normal use within a period of two (2) years from the date of shipment.

BE reserves the right to repair equipment under warranty with new or refurbished equipment or parts. BE's sole responsibility with respect to any equipment or parts not conforming to this warranty is to replace or repair such equipment upon the return thereof F.O.B. to BE's factory in Quincy, Illinois, U.S.A. In the event of replacement pursuant to the foregoing warranty, only the unexpired portion of the warranty from the time of the original purchase will remain in effect for any such replacement.

This warranty shall exclude the following products, component parts and/or assemblies:

(a) Transmitter power output tubes shall only carry the original manufacturers' or suppliers' standard warranty in effect on their original shipment date.

(b) All computers, computer peripherals, cables, hard disk drives, etc., shall only carry the manufacturers' or suppliers' standard warranty in effect on their original shipment date.

(c) "Components", defined as separate and individual parts (e.g. transistors, integrated circuits, capacitors, resistors, inductors, fans, etc), resold by BE from another manufacturer or supplier, shall only carry a 90 day warranty, effective the date of shipment. Any such 'Components' being returned for warranty claim must be (1) returned in their original packaging and (2) must be in new, unused condition.
BE is unable to process or resolve component defects or performance concerns on components that have been soldered, installed, wired or in any way altered from their new condition.

(d) "Resale Equipment", defined as equipment purchased from another manufacturer or supplier, then resold by BE, shall only carry such manufacturers' or suppliers' standard warranty in effect as of the original shipment date. All warranty claims against any and all 'resale equipment' sold by BE must be filed directly with the original equipment manufacturer. BE is unable to process or resolve equipment defects or performance concerns on products or services not manufactured by BE.

This warranty shall not extend to claims resulting from any acts of God, terrorism, war, defects or failures caused by Purchaser or user abuse or misuse, operator error, or unauthorized attempts to repair or alter the equipment in any way.

Under no circumstances shall BE be responsible for indirect, incidental or consequential damages, including, but not limited to transportation costs, non-authorized repair or service costs, downtime costs, costs for substituting equipment or loss of anticipated profits or revenue, incurred by Purchaser, whether based in contract, tort or for negligence or breach of statutory duty or otherwise.
The terms of the foregoing warranty shall be null and void if the equipment has been altered or repaired without specific written authorization from BE, or if not installed according to BE's instruction manuals, including, but not limited to, the absence of proper grounding, surge (TVSS) protection on the AC circuit panel or proper lightning protection/grounding on all output circuits, or if equipment is operated under environmental conditions or circumstances other than those specifically described in BE's product literature or instruction manual which accompany the equipment. The warranty shall be voided if the product or subassembly is equipped with a tamper seal and that tamper seal is broken. BE shall not be liable for any expense of any nature whatsoever incurred by the original user without prior written consent of BE. The warranty

©2013 Broadcast Electronics

provided herein shall terminate at the end of the period set forth above. **This warranty extends only to the original Purchaser and is not transferable.** There are no third party beneficiaries of any of the provisions of this warranty. If the equipment is described as "used" equipment, it is sold as is and where is and no warranty applies unless authorized in writing. .

EXCEPT AS SET FORTH HEREIN, AS TO TITLE AND AS SPECIFICALLY REQUIRED BY LAW, THERE ARE NO OTHER WARRANTIES, OR ANY AFFIRMATIONS OF FACT OR PROMISES BY BE, WITH REFERENCE TO THE EQUIPMENT, OR TO MERCHANTABILITY, FITNESS FOR A PARTICULAR APPLICATION, SIGNAL COVERAGE, INFRINGEMENT, OR OTHERWISE, WHICH EXTEND BEYOND THE DESCRIPTION OF THE EQUIPMENT ON THE FACE HEREOF.

©2013 Broadcast Electronics

IMPORTANT INFORMATION

EQUIPMENT LOST OR DAMAGED IN TRANSIT -

When delivering the equipment to you, the truck driver or carriers' agent will present a receipt for your signature. Do not sign it until you have:

1) Inspected the containers for visible signs of damage and 2) Counted the containers and compared with the amount shown on the shipping papers. If a shortage or evidence of damage is noted, insist that notation to that effect be made on the shipping papers before you sign them.

Further, after receiving the equipment, unpack it and inspect thoroughly for concealed damage. If concealed damage is discovered, immediately notify the carrier, confirming the notification in writing, and secure an inspection report. This item should be unpacked and inspected for damage WITHIN 15 DAYS after receipt. Claims for loss or damage will not be honored without proper notification of inspection by the carrier.

RF PRODUCT TECHNICAL ASSISTANCE, REPAIR SERVICE, PARTS -

Technical assistance is available from Broadcast Electronics by letter, prepaid telephone or E-mail. Equipment requiring repair or overhaul should be sent by common carrier, prepaid, insured, and well protected. If proper shipping materials are not available, contact the RF Technical Services Department for a shipping container. Do not mail the equipment. We can assume no liability for inbound damage, and necessary repairs become the obligation of the shipper. Prior arrangement is necessary. Contact the RF Technical Services Department for a Return Authorization.

Emergency and warranty replacement parts may be ordered from the following address. Be sure to include the equipment model number, serial number, part description, and part number. Non-emergency replacement parts may be ordered directly from the Broadcast Electronics stock room at the number shown below.

RF TECHNICAL SERVICES -

Telephone: +1 (217) 224-9617
E-Mail: rfservice@bdcast.com
Fax: +1 (217) 224-6258

FACILITY CONTACTS -

Broadcast Electronics, - Quincy Facility
4100 N. 24th St. P.O. BOX 3606
Quincy, Illinois 62305
Telephone: +1 (217) 224-9600
Fax: +1 (217) 224-6258
General E-Mail: bdcast@bdcast.com
Web Site: www.bdcast.com

PARTS -

Telephone: +1 (217) 224-9617
E-Mail: parts@bdcast.com

©2013 Broadcast Electronics

RETURN, REPAIR, AND EXCHANGES -

Do not return any merchandise without our written approval and Return Authorization. We will provide special shipping instructions and a code number that will assure proper handling and prompt issuance of credit. Please furnish complete details as to circumstances and reasons when requesting return of merchandise. All returned merchandise must be sent freight prepaid and properly insured by the customer.

MODIFICATIONS -

Broadcast Electronics, reserves the right to modify the design and specifications of the equipment in this manual without notice. Any modifications shall not adversely affect performance of the equipment so modified.

©2013 Broadcast Electronics

SAFETY PRECAUTIONS

PLEASE READ AND OBSERVE ALL SAFETY PRECAUTIONS//

ALL PERSONS WHO WORK WITH OR ARE EXPOSED TO POWER TUBES, POWER TRANSISTORS, OR EQUIPMENT WHICH UTILIZES SUCH DEVICES MUST TAKE PRECAUTIONS TO PROTECT THEMSELVES AGAINST POSSIBLE SERIOUS BODILY INJURY. EXERCISE EXTREME CARE AROUND SUCH PRODUCTS. UNINFORMED OR CARELESS OPERATION OF THESE DEVICES CAN RESULT IN POOR PERFORMANCE, DAMAGE TO THE DEVICE OR PROPERTY, SERIOUS BODILY INJURY, AND POSSIBLY DEATH.

DANGEROUS HAZARDS EXIST IN THE OPERATION OF POWER TUBES AND POWER TRANSISTORS -

The operation of power tubes and power transistors involves one or more of the following hazards, any one of which, in the absence of safe operating practices and precautions, could result in serious harm to personnel.

A. **HIGH VOLTAGE -** Normal operating voltages can be deadly. Additional information follows.

B. **RF RADIATION -** Exposure to RF radiation may cause serious bodily injury possibly resulting in Blindness or death. Cardiac pacemakers may be affected. Additional information follows.

C. **HOT SURFACES** Surfaces of air-cooled radiators and other parts of tubes can reach temperatures of several hundred degrees centigrade and cause serious burns if touched. Additional information follows.

D. **RF BURNS** Circuit boards with RF power transistors contain high RF potentials. Do not operate an RF power module with the cover removed.

©2013 Broadcast Electronics

HIGH VOLTAGE –

Many power circuits operate at voltages high enough to kill through electrocution. Personnel should always break the primary AC Power when accessing the inside of the transmitter.

RADIO FREQUENCY RADIATION

Exposure of personnel to RF radiation should be minimized, personnel should not be permitted in the vicinity of open energized RF generating circuits, or RF transmission systems (waveguides, cables, connectors, etc.), or energized antennas. It is generally accepted that exposure to "high levels" of radiation can result in severe bodily injury including blindness. Cardiac pacemakers may be affected.

The effect of prolonged exposure to "low level" RF radiation continues to be a subject of investigation and controversy. It is generally agreed that prolonged exposure of personnel to RF radiation should be limited to an absolute minimum. It is also generally agreed that exposure should be reduced in working areas where personnel heat load is above normal. A 10 mW/cm^2 per one tenth hour average level has been adopted by several U.S. Government agencies including the Occupational Safety and Health Administration (OSHA) as the standard protection guide for employee work environments. An even stricter standard is recommended by the American National Standards Institute which recommends a 1.0 mW/cm^2 per one tenth hour average level exposure between 30 Hz and 300 MHz as the standard employee protection guide (ANSI C95.1-1982).

RF energy must be contained properly by shielding and transmission lines. All input and output RF connections, such as cables, flanges and gaskets must be RF leak proof. Never operate a power tube without a properly matched RF energy absorbing load attached. Never look into or expose any part of the body to an antenna or open RF generating tube or circuit or RF transmission system while energized. Monitor the tube and RF system for RF radiation leakage at regular intervals and after servicing.

HOT SURFACES –

The power components in the transmitter are cooled by forced-air and natural convection. When handling any components of the transmitter after it has been in operation, caution must always be taken to ensure that the component is cool enough to handle without injury.

©2013 Broadcast Electronics

Table of Contents

1 Overview ..... - 1 -

2 Installation Preparation ..... - 8 -
2.1 Verify Contents of Shipment ..... - 8 -
2.2 1 kW Models - ..... - 8 -
2.3 2 kW Models - ..... - 8 -
2.4 3 kW Models - ..... - 8 -
2.5 5 kW Models - ..... - 8 -
2.6 Tools / Items Needed For Installation (not supplied) ..... - 8 -
2.7 Mounting Considerations ..... - 8 -
2.8 Estimated Time for Installation / Setup ..... - 8 -

3 STXLP-1kW Rear Panel ..... - 9 -

4 STXLP-1kW Assembly Front Panel Features ..... - 14 -

5 STXLP-2kW, STXLP-3kW, And STXLP-5kW PA Assembly Front Panel Features - 16 -

6 STXLP-2kW, STXLP-3kW, STXLP-5kW Combiner Assy Front Panel Features .... - 17 -

7 Installation ..... - 18 -
7.1 Install Into Equipment Rack ..... - 18 -
7.2 1 kW Models - ..... - 18 -
7.3 2 kW Models - ..... - 18 -
7.4 3 kW Models - ..... - 18 -
7.5 5 kW Models - ..... - 18 -
7.6 RFI/EMI Protection - Ferrite Ring Installation ..... - 19 -
7.7 AES Connections – Requires Optional Stereo Generator PCB ..... - 19 -
7.8 ANALOG L/R Connections – Requires Optional Stereo Generator PCB ..... - 19 -
7.9 Composite Connections ..... - 22 -
7.10 SCA1 Connections ..... - 22 -
7.11 SCA2 Connections ..... - 22 -
7.12 RDS Connections ..... - 22 -
7.13 19 kHz Out Connections ..... - 22 -
7.14 Exciter - Using Only the Internal Exciter ..... - 22 -
7.15 Exciter - Using Only the External Exciter ..... - 22 -
7.16 Exciter - Using Both the Internal and External Exciter ..... - 23 -
7.17 Ethernet Connections ..... - 23 -
7.18 Remote Control Unit Connections ..... - 23 -
7.19 Failsafe Connection ..... - 24 -
7.20 RF Sample Connection ..... - 24 -
7.21 HD System Connections ..... - 24 -
7.22 RF Out Connection ..... - 24 -
7.23 RF/Control Connections – 2 kW Models ..... - 24 -
7.24 RF/Control Connections – 3 kW Models ..... - 25 -

©2013 Broadcast Electronics

7.25 RF/Control Connections – 5 kW Models ..... - 25 -
7.26 Ground Connection ..... - 25 -
7.27 AC Input Connection ..... - 26 -
7.28 1 kW Models - ..... - 26 -
7.29 2 kW Models – ..... - 26 -
7.30 3 kW Models – ..... - 26 -
7.31 5 kW Models – ..... - 26 -

8 Initial Turn On and Setup ..... - 28 -
8.1 Overview ..... - 28 -
8.2 Initial AC On ..... - 28 -
8.3 Set The Power Output ..... - 28 -
8.4 Set The Frequency ..... - 30 -
8.5 Select The Audio Input. ..... - 32 -
8.6 Calibrate the Audio/SCA/RDS Inputs ..... - 32 -
8.7 Audio Input Level Menu ..... - 37 -
8.8 SCA/RDS Input Level Menu ..... - 38 -
8.9 Set The Preemphasis ..... - 39 -
8.10 Set The Pilot Level And Enable/Disable The Pilot ..... - 40 -
8.11 Set The Mono/Stereo Mode ..... - 42 -
8.12 Setup ..... - 43 -
8.13 Diagnostics ..... - 46 -
8.14 Ethernet Setup ..... - 49 -
8.15 Metering ..... - 54 -
8.16 Turn On ..... - 57 -
8.17 Standard I.P Control And Optional RGUI System - Password Set ..... - 58 -
8.18 Set the Clock ..... - 62 -
8.19 HD Operation With FXI 60/250 Exciter ..... - 65 -

9 I.P. Control ..... - 68 -
9.1 Standard I.P. Interface ..... - 68 -
9.2 Maximum Number And Type Of RGUI/Web Users ..... - 68 -
9.3 Optional STXLP RGUI I.P. Control ..... - 73 -

10 Maintenance ..... - 74 -
10.1 Diagnostics ..... - 74 -
10.2 Software Update – Controller/Exciter ..... - 76 -
10.3 Emergency Control – Backup Controller ..... - 77 -
10.4 Front Panel and Circuit Board Indicators ..... - 78 -
10.5 Power Output with PA Failures ..... - 80 -
10.6 Troubleshooting Information ..... - 81 -
10.7 Replace the Exciter ..... - 89 -
10.8 Replace the Optional Stereo Generator ..... - 90 -
10.9 Replace the Controller ..... - 90 -
10.10 Replace the Fan ..... - 92 -
10.11 Replace the PA Module Assembly ..... - 93 -
10.12 Replace the PA Power Supply Module ..... - 95 -

©2013 Broadcast Electronics

10.13 Replace the Front Panel Display Board ..... - 98 -
10.14 Replace the Low-Pass Filter Assembly ..... - 98 -
10.15 Replace a Final Transistor on the PA Module..... - 99 -
10.16 Replace the add-on PA Unit Controller ..... - 101 -
10.17 Replace the Combiner Fan..... - 102 -
10.18 Replace the Combiner Fan or Low Voltage Power Supply..... - 103 -

11 BE Part Numbers .....- 104 -

12 RF Technical Services Contact Information.....- 170 -

13 Drawings .....- 170 -

©2013 Broadcast Electronics

This page intentionally left blank

©2013 Broadcast Electronics

1 Overview

The STXLP FM transmitter series is designed to provide a low power cost effective solution for the FM broadcast market (refer to Figure 1-1). The STXLP is available in 4 models providing power levels from 250 W to 5 kW.

The STXLP can be equipped with several options. An optional stereo generator circuit board allows the unit to generate a stereo signal from an AES or Analog L/R audio source. An optional RGUI (Remote Graphical User Interface) system allows control, monitoring, fault analysis, and event logging using an I.P. based tool. The following text presents the steps required for installation:

- Install the transmitter in a rack.
- If the internal exciter is to be used, connect a composite source to the unit. If the unit is equipped with the optional stereo generator board, AES or analog L/R may be connected to the unit. If an external exciter is to be used, an external relay and attenuator will be required for the connection.
- Connect any SCA or RDS equipment if used.
- Connect a network patch cable if I.P. control is desired.
- Connect the failsafe.
- Connect the antenna.
- Connect the AC input.
- Set the transmitter output power.
- Select the audio input.
- Calibrate the audio input level
- Calibrate the SCA1/SC2/RDS levels.
- Select internal or external exciter.
- Turn the unit on.

The STXLP has been tested at the factory. The following text presents the preset factory defaults. These include settings if the unit is equipped with the optional stereo generator circuit board.

- Frequency – Customer requested Frequency
- Power Level – 1 kW Model - 1000 W, 2 kW Model - 2000 W,
  3 kW Model - 3000 W, 5 kW Model - 5000 W
- 100% Modulation – Customer requested Deviation (75 kHz, 125 kHz, 200 kHz)
- Preemphasis – 75 uS
- Pilot Level – 10%
- Mono/Stereo Mode - Stereo
- Internal/External Exciter – Internal
- Audio Input – Composite
- Modulation Level – 100%
- Emergency Pwr – 1 kW Model - 250 W, 2 kW Model - 500 W,
  3 kW Model - 750W, 5 kW Model – 1250 W
- SCA1 Injection = 10%
- SCA2 Injection = 10%
- RDS Injection = 10%
- Ethernet –
  - I.P. – 10.2.4.110
  - Subnet Mask – 255.255.0.0
  - Gateway – 10.2.4.1

©2013 Broadcast Electronics

- Passwords -
  - Optional RGUI Password - 222222
  - Chief – 123456
  - Operator - 111111

STXLP – 1kW

STXLP – 2 kW

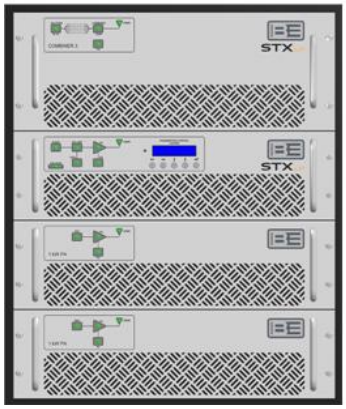

STXLP – 3 kW

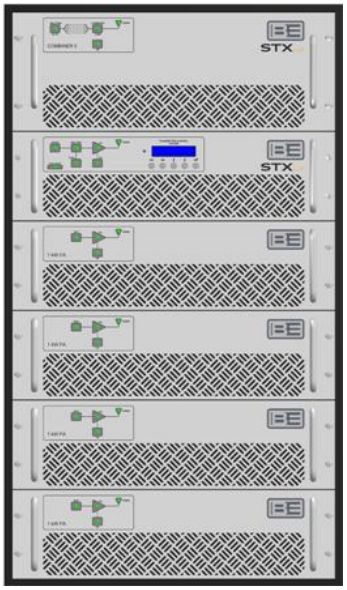

STXLP – 5 kW

Figure 1-1: STXLP – TRANSMITTER MODELS

©2013 Broadcast Electronics

The following text presents STXLP optional equipment.

Table 1-1: Optional Equipment

Optional Equipment		
PART NUM	**DESCRIPTION**	**QTY**
909-4020	Stereo Generator Circuit Board	1
909-4600	STXLP Remote Graphical User Interface (RGUI)	1
979-4603	Kit, External Exciter, For STX With FXI-60/FXI-250	1
979-4603-001	Kit, External Exciter, For STX With FX-50/FM-100C/FM-250C	1
909-4501-X00	STXLP-5kW AC Power Distribution Panel	1
909-4301-X00	STXLP-3kW AC Power Distribution Panel	1
909-4201-X00	STXLP-2kW AC Power Distribution Panel	1
979-4302-325	Upgrade Kit, STX-3kW to STX-5kW.	1
979-4202-225	Upgrade Kit, STX-2kW to STX-5kW.	1
979-4202-223	Upgrade Kit, STX-2kW to STX-3kW.	1
979-4102-125	Upgrade Kit, STX-1kW to STX-5kW.	1
979-4102-123	Upgrade Kit, STX-1kW to STX-3kW.	1
979-4102-122	Upgrade Kit, STX-1kW to STX-2kW.	1
471-4219	Optional Support Brackets	1

The following text presents the STXLP specifications.

Table 1-2: Specifications

Parameter	Specification
Physical	
1 kW Model -	
Height	3RU (5.25”,13.4 cm)
Width	19” (48.3 cm) EIA Rack Mountable.
Depth	26” (66.1 cm) deep including connectors.
Weight	44 lbs (19.9 kg) unpacked.
Outlet Size	75 in^2 (493 cm^2), rear of unit
2 kW Model -	
Height	17.5”,(44.5 cm)
Width	19” (48.3 cm) EIA Rack Mountable.
Depth	26” (66.1 cm) deep including connectors.
Weight	127 lbs (57.6 kg) unpacked.
Outlet Size	165 in^2 (1065 cm^2), rear of unit
3 kW Model -	
Height	22.75”(57.8 cm)
Width	19” (48.3 cm) EIA Rack Mountable.
Depth	26” (66.1 cm) deep including connectors.
Weight	168 lbs (76.2 kg) unpacked.
Outlet Size	220 in^2 (1419 cm^2), rear of unit
5 kW Model -	
Height	33.25”(84.5 cm)
Width	19” (48.3 cm) EIA Rack Mountable.
Depth	26” (66.1 cm) deep including connectors.
Weight	249 lbs (112.9 kg) unpacked.
Outlet Size	330 in^2 (2129 cm^2), rear of unit

©2013 Broadcast Electronics

Environmental	
Temperature	-10°C to +50°C.
Altitude	10,000ft (3048M).
Humidity	95% max., non-condensing.
1 kW Model	
Cooling Air Requirements	200 CFM (5.7 $m^{3/}$/Min)
Heat Dissipation	750 W at 1 kW RF Output into a 50 Ohm load, FM Only Mode.
BTU	2560 BTU/H at 1 kW RF Output into a 50 Ohm load.
2 kW Model	
Cooling Air Requirements	600 CFM (17.0 $m^{3/}$/Min)
Heat Dissipation	1550 W at 2 kW RF Output into a 50 Ohm load, FM Only Mode.
BTU	5295 BTU/H at 2 kW RF Output into a 50 Ohm load.
3 kW Model	
Cooling Air Requirements	800 CFM (22.7 $m^{3/}$/Min)
Heat Dissipation	2300 W at 3 kW RF Output into a 50 Ohm load, FM Only Mode.
BTU	7850 BTU/H at 3 kW RF Output into a 50 Ohm load.
5 kW Model	
Cooling Air Requirements	1200 CFM (34.0 $m^{3/}$/Min)
Heat Dissipation	3800 W at 5 kW RF Output into a 50 Ohm load, FM Only Mode.
BTU	13000 BTU/H at 5 kW RF Output into a 50 Ohm load.
AC Input	
Frequency	47-63 Hz.
Power Factor	≥0.98 .
Surge Protection	Surge protection required.
1 kW Model	
Voltage	180 to 260 VAC, Single Phase.
Power	Requires 20 Amps Max.
Power Consumption	1.75 kW (calculated) at 1 kW.
Current Draw	16 Amps Max.
2 kW Model	
Power Consumption	3.5 kW (calculated) at 2 kW.
Single Phase -	
Voltage	180 to 260 VAC
Power	Disconnect Size 40 Amps.
Current Draw	32 Amps Max.
3 kW Model	
Power Consumption	5.3 kW (calculated) at 3 kW.
Single Phase -	
Voltage	180 to 260 VAC
Power	Disconnect Size 60 Amps.
Current Draw	48 Amps Max.
Three Phase -	
Voltage	180 to 260VAC Delta or 311 to 449VAC Wye
Power	Disconnect Size 30 Amps
Current Draw	28 Amps Max.

©2013 Broadcast Electronics

5 kW Model	
Power Consumption	8.8 kW (calculated) at 5 kW.
Single Phase -	
Voltage	180 to 260 VAC
Power	Disconnect Size 100 Amps.
Current Draw	80 Amps Max.
Three Phase -	
Voltage	180 to 260VAC Delta or 311 to 449VAC Wye
Power	Disconnect Size 60 Amps.
Current Draw	47 Amps Max.
RF Output	
Accuracy	+/-5%.
Impedance	50 Ohms nominal.
VSWR	Rated Power into 1.5:1 VSWR.
1 kW Model	
FM Only	250-1100W.
FM+HD (-20 dB)*	175-770W.
FM+HD (-10 dB)*	110-495W.
HD Only*	75-330W.
Resolution	1W.
Efficiency	64% Typical.
RF Output Connector	Type N, Female.
2 kW Model	
FM Only	500-2000W.
FM+HD (-20 dB)*	350-1280W.
FM+HD (-10 dB)*	220-820W.
HD Only*	150-600W.
Resolution	2W.
Efficiency	64% Typical.
RF Output Connector	1 5/8" Hard Line Coax, 50 Ohm.
3 kW Model	
FM Only	750-3000W.
FM+HD (-20 dB)*	525-1920W.
FM+HD (-10 dB)*	330-1230W.
HD Only*	225-900W.
Resolution	3W.
Efficiency	62% Typical.
RF Output Connector	1 5/8" Hard Line Coax, 50 Ohm.
5 kW Model	
FM Only	1250-5000W.
FM+HD (-20 dB)*	875-3200W.
FM+HD (-10 dB)*	550-2050W.
HD Only*	375-1500W.
Resolution	5W.
Efficiency	62% Typical.
RF Output Connector	1 5/8" Hard Line Coax, 50 Ohm.
Frequency	
Range	87.5MHz to 108MHz; 10kHz increments.
Stability	Internal Osc: +/-150 Hz, -10°C to +50°C.
Modulation	
Type	Direct-to-Channel; FM (HD or FM + HD only with external exciter.
Capability	300 kHz
RF Harmonics Suppression	Meets all FCC/DOC requirements and CCIR recommendations.

©2013 Broadcast Electronics

Composite Input	
Connector	BNC, un-balanced
Impedance	10k ohms
Level	3.5V p-p for 75 kHz modulation
Amplitude Response	+/-0.03 dB 20Hz to 53 kHz; +/-0.25 dB 53 kHz to 100 kHz
SNR	-80dB; below 100% modulation @ 400 Hz
THD + Noise	0.1%; 20 Hz to 53 kHz; 0.15% 53 kHz to 100 kHz
Stereo Separation	55dB; (typical 60 dB)
IMD	0.13%, SMPTE (60.7000 Hz, 1:1 ratio)
Asynchronous AM S/N Ratio	Better than -65 dB (typical -70dB) below referenced to 100% peak AM modulation.
Synchronous AM S/N Ratio	Better than -53 dB (typical -60dB) below referenced to 100% peak AM modulation. 75usec de-emphasis with 75 kHz deviation @ 400 Hz sine wave.
SCA1 & 2 Inputs	
Connectors(2)	BNC, un-balanced
Impedance	10k ohms
Level	3.5V p-p for 10% injection level.
Response	+/-0.5dB; 53 kHz to 100 kHz.
RDS Input	
Connector	BNC, un-balanced.
Impedance	10k ohms.
Level	3.5V p-p for 10% injection level.
Response	+/-0.5 dB; 53 kHz to 100 kHz.
Pilot Stability	+-0.3 Hz, 0°C to +50°C.
AES Input **	
Connector	XLR Female.
Impedance	110 Ohms, balanced.
Level	-2 dBFS for 100% modulation.
Amplitude Response	+/-0.25 dB; 20 Hz to 15 kHz.
SNR	75 dB below 100% modulation @ 400 Hz
IMD	0.1% or better.
THD + Noise	0.1% or better.
Stereo Separation	55dB (typical 60dB); 20 Hz to 15 kHz
Pre-emphasis	None, 50 uSec, 75 uSec selectable
Modes	Mono L, Mono R, Mono L+R, Stereo
Analog L/R **	
Connectors	XLR Female
Impedance	600 Ohms or 10K Ohms, selectable, balanced.
Level	+10 dBm for 100% modulation into 600 Ohms.
Amplitude Response	+/-0.25dB; 20Hz to 15 kHz
SNR	75 dB below 100% modulation @ 400 Hz
IMD	0.1% or greater.
THD + Noise	0.1% or greater.
Stereo Separation	55 dB (typical 60 dB); 20 Hz to 1 5kHz
Pre-emphasis	None, 50 usec, 75 usec selectable
Modes	Mono L, Mono R, Mono L+R, Stereo

©2013 Broadcast Electronics

19kHz Output **	
Connector	BNC un-balanced
Impedance	4.7 k Ohm minimum load
Level	1V p-p
Regulatory	
FCC/DOC/CE/IEC 215 Safety	Meets or exceeds FCC/DOC/CE and IEC 215 Safety requirements

* External HD Exciter Required

** Optional Stereo Generator Circuit Board Required

©2013 Broadcast Electronics

2 Installation Preparation

2.1 Verify Contents of Shipment

2.2 1 kW Models -

- ☐ 909-4101, STXLP-1kW FM Transmitter
- ☐ 979-4110, STXLP-1kW Installation Kit
- ☐ 979-4111, STXLP Instruction Manual Kit

2.3 2 kW Models -

- ☐ 909-4201, STXLP-2kW FM Transmitter
- ☐ 979-4210, STXLP-2kW Installation Kit
- ☐ 979-4111, STXLP 1kW Instruction Manual Kit

2.4 3 kW Models -

- ☐ 909-4301, STXLP-3kW FM Transmitter
- ☐ 979-4310, STXLP-3kW Installation Kit
- ☐ 979-4111, STXLP 1kW Instruction Manual Kit

2.5 5 kW Models -

- ☐ 909-4501, STXLP-5kW FM Transmitter
- ☐ 979-4510, STXLP-5kW Installation Kit
- ☐ 979-4111, STXLP Instruction Manual Kit

2.6 Tools / Items Needed For Installation (not supplied)

- ☐ Small Flat Blade Screwdriver
- ☐ Regular Flat Blade Screwdriver
- ☐ Wire Strippers
- ☐ Solder and Soldering Iron
- ☐ Cable for 37 Pin Connector
- ☐ Heat Shrink
- ☐ Appropriate Tool for Rack Hardware
- ☐ Standard Ethernet Cable to connect from the transmitter to the network.

2.7 Mounting Considerations

The STXLP-1kW unit is designed to mount in a standard 19" E.I.A. rack or cabinet and is 3 rack units in height. The STXLP – 2kW unit consists of: 1) one STXLP – 1kW transmitter assembly which is 3 rack units in height, 2) one amplifier assembly which is 3 rack units in height, and 3) a combiner assembly which is 4 rack units in height. The STXLP – 3kW unit consists of: 1) one STXLP – 1kW transmitter assembly which is 3 rack units in height, 2) 2 amplifier assemblies which are each 3 rack units in height, and 3) a combiner assembly which is 4 rack units in height. The STXLP – 5kW unit consists of: 1) one STXLP – 1kW transmitter assembly which is 3 rack units in height, 2) 4 amplifier assemblies which are each 3 rack units in height, and 3) a combiner assembly which is 4 rack units in height.

2.8 Estimated Time for Installation / Setup

Providing that you have the proper materials and tools listed above, the installation and setup of the STXLP transmitter will take approximately 1 hour.

©2013 Broadcast Electronics

3 STXLP-1kW Rear Panel

For STXLP 1kW models, the STXLP 1kW assembly is used as a standalone transmitter. In STXLP 2kW, 3kW, and STXLP 5kW models, the STXLP 1kW assembly is used as the main control and audio interface center. The following text presents the STXLP 1kW assembly rear panel connections and features.

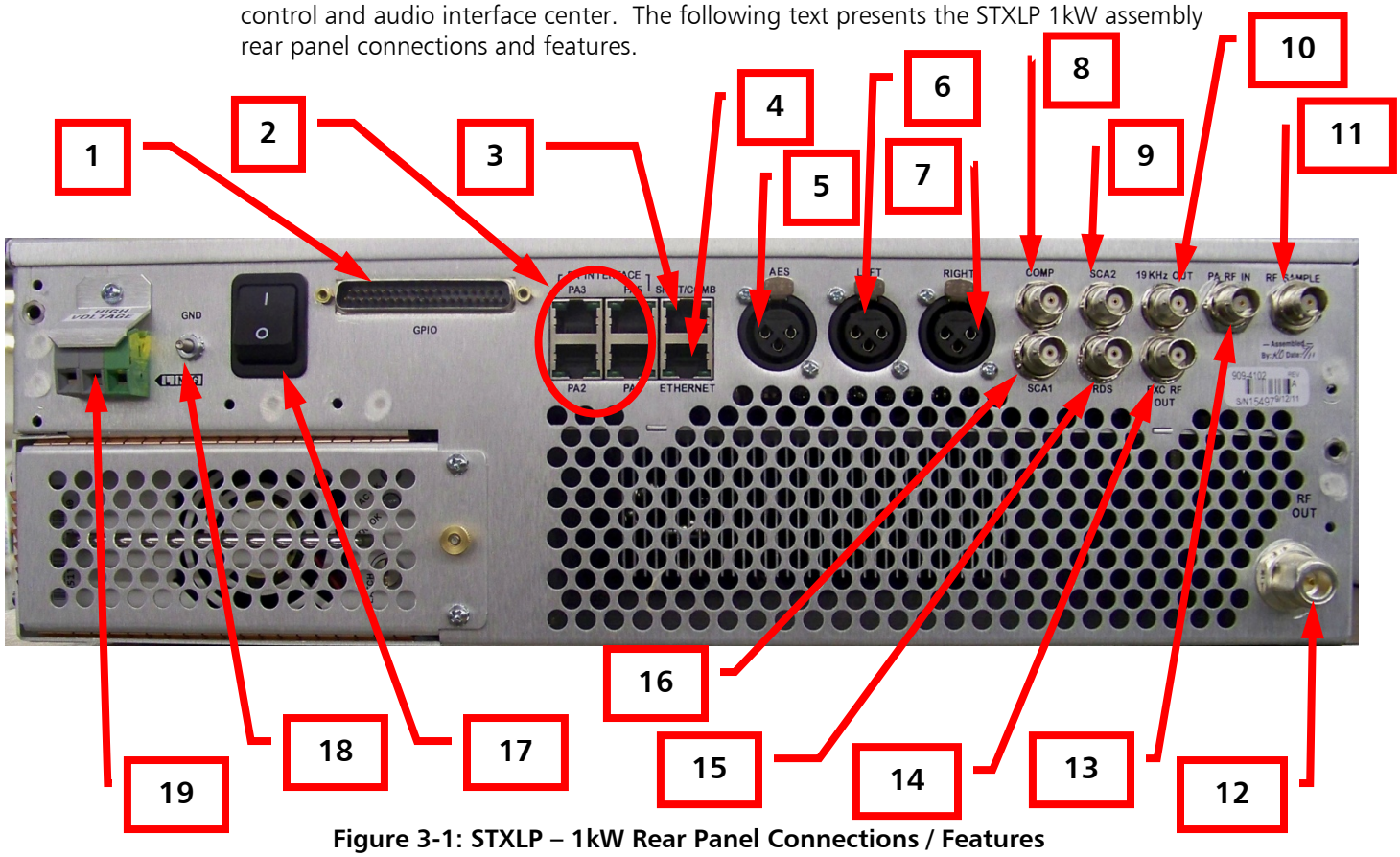

Figure 3-1: STXLP – 1kW Rear Panel Connections / Features

1) **GPIO** – General purpose input/output connector. This connector is used to interface remote control units to the transmitter. The following text presents the pin descriptions.

Table 3-1: GPIO Inputs

Pin No.	Name	Description
1	Fault Reset	Resets all the transmitter faults when active. Requires a momentary low (0 V) to activate.
2	Failsafe	Transmitter failsafe input. Requires a sustained low to close.
3	Transmitter On	Turns the transmitter on when active. Requires a momentary low (0 V) to activate.
4	Transmitter Off	Turns the transmitter off when active. Requires a momentary low (0 V) to activate.
5	Mute	Transmitter is muted while the input is low (0 V).
6	Lower Transmitter Power	Lowers the transmitter power while input is low (0 V).
7	Raise Transmitter Power	Raises the transmitter power while the input is low (0 V).
8	Internal/External Exciter Control	Toggles between internal and external exciter when active. Requires a momentary low (0 V) to activate.
9	Controller Reset	Resets the controller when active. Requires a momentary low (0 V) to activate.
10	External Exciter Fault Input	This input requires the connection of external exciter fault output. On the external exciter, select a status output which will be active when any exciter fault occurs. Requires a sustained low (0 V) to activate.
11	FM Only Mode Input Select	FM Only mode is selected while the input is low (0 V). Active only if in external exciter mode.
12	Ground	Ground to be used for remote input connections.
13	FM+HD Mode Input Select	FM + HD mode is selected while the input is low (0 V). Active only if in external exciter mode.
14	HD Only Mode Input Select	HD Only mode is selected while the input is low (0 V). Active only if in external exciter mode.
18	PA Module Meter Select Input	For STXLP 2 kW, 3 kW, and 5 kW models, toggles between the PA modules for status readings. Requires a momentary low (0 V) to activate. Not required for 1 kW models.
19	Ground	Ground to be used for remote input connections.

©2013 Broadcast Electronics

Table 3-2 GPIO Outputs

Pin No.	Name	Description
15	Reflected Power	This output is a dc voltage (0 to 5 V) for remote reflected power monitoring of the system. 5V = 100 W – 1kW Models, 200 W – 2kW Models, 300 W – 3kW Models, 500 W – 5kW Models.
16	PA1 Thru PA5 Total Current	For 1 kW models, outputs a dc voltage (0 to 5 V) for remote PA1 total current monitoring. For STXLP 2 kW, 3 kW, and 5 kW models, outputs a dc voltage (0 to 5V) for a specific PA total current as determined by the PA Module Meter Select Input.
17	PA1 Thru PA5 Temperature	For 1 kW models, outputs a dc voltage (0 to 5 V) for remote PA1 temperature monitoring. For STXLP 2kW, 3 kW, and 5 kW models, outputs a dc voltage (0 to 5V) for a specific PA temperature as determined by the PA Module Meter Select Input.
20	General Fault Status	General fault status. This output goes low (0 V) when any transmitter fault occurs.
21	VSWR Status	VSWR fault status. This output goes low (0 V) when VSWR of greater than 1.5:1 is detected.
22	Transmitter On Status	Transmitter on status. This output goes low (0 V) when the transmitter is on.
23	Transmitter Off Status	Transmitter off status. This output goes low (0 V) when the transmitter is off.
24	Mute Status	Mute status. This output goes low (0 V) when the transmitter is muted.
25	AFC Lock Status	AFC Lock status. This output goes low (0 V) when the internal exciter is locked to the assigned frequency.
26	Power Supply Fault Status	Power Supply fault status. This output goes low (0 V) when a power supply fault is detected.
27	Internal/External Exciter Status	Internal/External exciter status. This output goes high (+5V) when the internal exciter is selected. This output goes low (0 V) when the external exciter is selected.
28	PA Fault	PA Fault status. This output goes low (0 V) when any PA fault is detected.
29	PA1 Thru PA5 Forward Power	For 1 kW models, outputs a dc voltage (0 to 5 V) for remote PA1 forward power monitoring. For STXLP 2 kW, 3 kW, and 5 kW models, outputs a dc voltage (0 to 5V) for a specific PA forward power as determined by the PA Module Meter Select Input.
30	PA1 Thru PA5 Reflected Power	For 1 kW models, outputs a dc voltage (0 to 5 V) for remote PA1 reflected power monitoring. For STXLP 2 kW, 3 kW, and 5 kW models, outputs a dc voltage (0 to 5V) for a specific PA reflected power as determined by the PA Module Meter Select Input.
31	Not Used	
32	+5V Out	+5V used for remote status connections.
33	Forward Power	This output is a dc voltage (0 to 5 V) for remote forward power monitoring. 5V = 1100 W – 1kW Models, 2000 W – 2kW Models, 3000 W – 3kW Models, 5000 W – 5kW Models.
34	PA Voltage	This output is a dc voltage (0 to 5 V) for remote PA voltage monitoring. 5V = 50 V PA Power Supply.
35	HD Power Control	This output is used only when the transmitter is configured in an HD system. When used in an HD system, the output is a dc voltage (0 to 5 V) used to control power.

©2013 Broadcast Electronics

Pin No.	Name	Description
36	External Exciter Relay Control	This output goes low (0 V) when the external exciter is selected.
37	Ground	Ground to be used for remote output connections.

2) **PA2/PA3/PA4/PA5** – For STXLP 2kW, 3 kW, and 5 kW models, the PA2 through PA5 ports are used to send control data to and receive data from an individual PA module. Not used for STXLP 1 kW models.
3) **SPLIT/COMB** – For STXLP 2kW, 3 kW, and 5 kW models, the SPLIT/COMB port is used to send control data to and receive data from the splitter/combiner. Not used for STXLP 1 kW models.
4) **ETHERNET** – The ETHERNET port is used to interface the transmitter with a local network or the Internet.

   NOTE: TO ENSURE OPERATIONAL INTEGRITY OF THE STX LP TRANSMITTER WHILE USING IP CONTROL, IT IS STRONGLY RECOMMENDED THAT THE UNIT BE INSTALLED ON A PRIVATE NETWORK, BEHIND A FIREWALL, WITH SECURED VIRTUAL PRIVATE NETWORK (VPN) ACCESS.

5) **AES** – The AES XLR connector is used to interface AES audio to the transmitter. Not used if the transmitter is not equipped with the optional stereo generator circuit board.
6) **LEFT** – The LEFT XLR connector is used to interface analog left channel audio to the transmitter. Not used if the transmitter is not equipped with the optional stereo generator circuit board.
7) **RIGHT** – The RIGHT XLR connector is used to interface analog right channel audio to the transmitter. Not used if the transmitter is not equipped with the optional stereo generator circuit board.
8) **COMP** – The COMP BNC connector is used to interface a composite signal such as from a composite link to the transmitter.
9) **SCA2** – The SCA2 BNC connector is used to interface a subcarrier generator signal to the transmitter SCA2 input.
10) **19 kHz OUT** – The 19 kHz OUT BNC connector is used to output the pilot signal for external equipment requiring a pilot signal for synchronization. Not used if the transmitter is not equipped with the optional stereo generator circuit board.
11) **RF SAMPLE – For STXLP – 1kW models, t**he RF SAMPLE BNC connector is an RF sample which can be used for monitoring of the RF signal. Typical connections include a modulation monitor or spectrum analyzer. The output level is 2V RMS at 1 kW. For 2kW, 3kW, and 5 kW models, the RF sample port is located on the combiner.
12) **RF OUT** – The RF OUT Type N female connector is the transmitter RF output.
13) **PA RF IN** – The PA RF IN BNC connector is used to interface: 1) the output of an external exciter to the transmitter if used or 2) the internal exciter to the PA (output from the EXC RF OUT connector).
14) **EXC RF OUT** – For STXLP 1 kW models, the EXC RF OUT BNC connector is used to interface the exciter output to the PA. For STXLP 2 kW, 3 kW and 5 kW models, the EXC RF OUT BNC connector is used to interface the exciter output to the splitter/combiner.
15) **RDS** – The RDS BNC connector is used to interface an RDS signal to the transmitter RDS input.
16) **SCA1** – The SCA1 BNC connector is used to interface a subcarrier generator signal to the transmitter SCA1 input.
17) **ON/OFF SWITCH** – Transmitter AC ON/OFF switch.

©2013 Broadcast Electronics

18) **GND** – The GND terminal provides a connection for a chassis ground strap or wire.
19) **AC INPUT TERMINAL BLOCK** – The AC input block is used for the AC input connection.

©2013 Broadcast Electronics

4 STXLP-1kW Assembly Front Panel Features

For STXLP 1kW models, the STXLP 1kW assembly is used as a standalone transmitter. In STXLP 2kW, 3kW, and STXLP 5kW models, the STXLP 1kW assembly is used as the main control and audio interface center. The following text presents the STXLP 1kW assembly front panel connections and features.

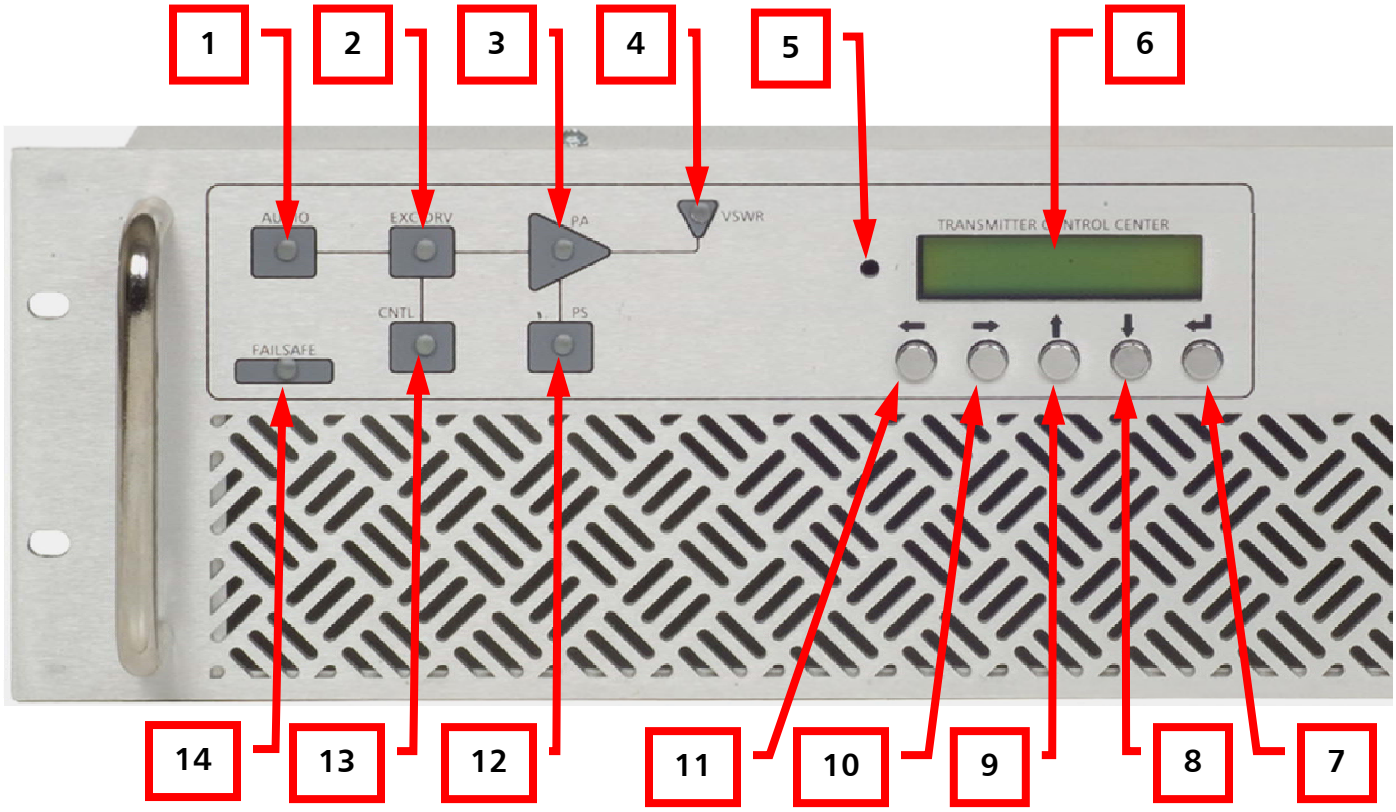

Figure 4-1: STXLP Front Panel Features

1) **AUDIO INDICATOR** – The audio indicator illuminates red if no modulation is detected in the selected audio input source. The indicator illuminates green during normal operation.
2) **EXCITER INDICATOR** – The exciter indicator illuminates red if the internal exciter: 1) AFC (Automatic Frequency Control) becomes unlocked or 2) a communication fault occurs. The indicator illuminates green during normal operation.
3) **PA INDICATOR** – For 1 kW models, the PA indicator illuminates red if a fault is detected in the PA module. For 2 kW, 3 kW, and 5 kW models, the PA indicator illuminates red if a fault is detected in any PA module. The indicator illuminates green during normal operation.
4) **VSWR INDICATOR** – The VSWR indicator illuminates red when a greater than 1.5:1 VSWR condition is detected. The indicator illuminates green during normal operation.
5) **LCD CONTRAST CONTROL** – The LCD contrast control is used to adjust the backlight on the LCD display.
6) **TRANSMITTER CONTROL CENTER** – The LCD display is used to present transmitter information to the user.

©2013 Broadcast Electronics

7) ↵ **RETURN BUTTON –** The return button is used to select a menu for editing, saves data changes made by the user, and returns the user to selected top level menu.

8) ↓ **DOWN ARROW BUTTON –** The down button allows the user to move down the menu tree, decreases the selected value, or changes an option state.

9) ↑ **UP ARROW BUTTON –** The up arrow button allows the user to move up the menu tree, increases the selected value, or changes an option state.

10) → **RIGHT ARROW BUTTON –** The right arrow button allows the user to move the cursor to the right on the LCD display. In menus with no cursor, goes back to the sub menu such as Metering (refer to the STXLP Menu Tree at the end of this manual for specific menus).

11) ← **LEFT ARROW BUTTON –** The left arrow button allows the user to move the cursor to the left on the LCD display. In menus with no cursor, goes back to the main menu (refer to the STXLP Menu Tree at the end of this manual for specific menus).

12) **PS INDICATOR** – For 1 kW models, the PS indicator illuminates red if a fault is detected in the PA power supply module. For 2 kW, 3 kW, and 5 kW models, the PS indicator illuminates red if a fault is detected in any PA power supply module. The indicator illuminates green during normal operation.

13) **CNTL INDICATOR** – The CNTL indicator flashes red to indicate when the unit has switched to the backup controller due to a fault in the main controller.

14) **FAILSAFE INDICATOR** – The FAILSAFE indicator illuminates red when the failsafe is opened. The indicator illuminates green when the failsafe is closed.

©2013 Broadcast Electronics

5 STXLP-2kW, STXLP-3kW, And STXLP-5kW PA Assembly Front Panel Features

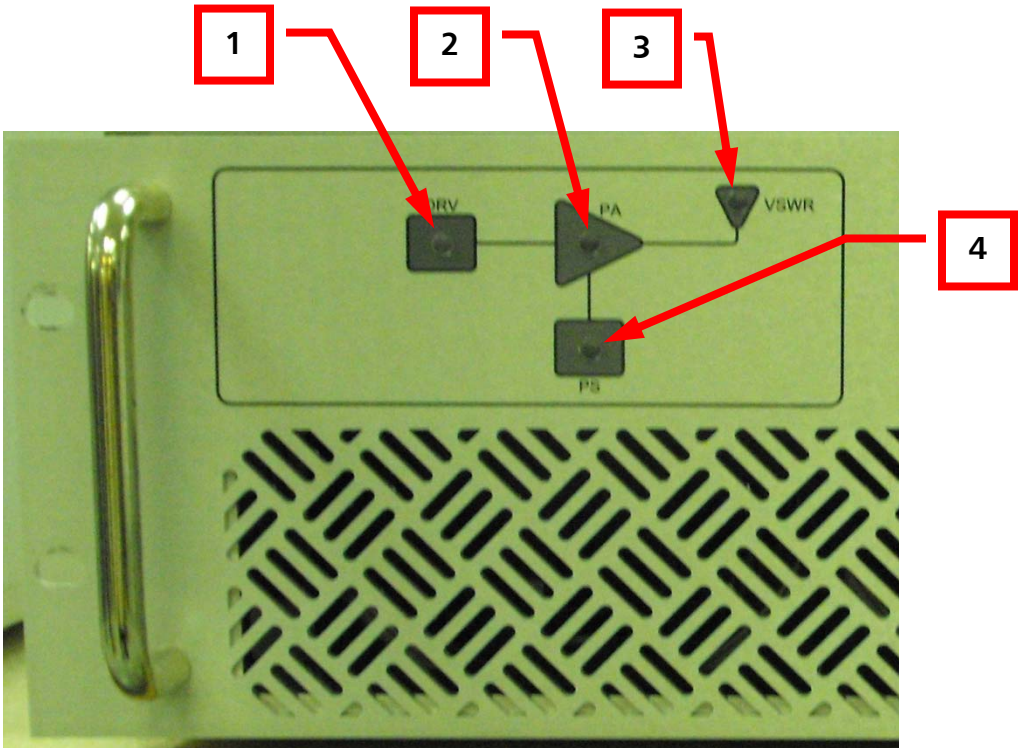

Figure 5-1: STXLP PA Assembly Front Panel Features

1) **DRV INDICATOR** – The drive indicator illuminates red if no RF is present at the input. The indicator illuminates green during normal operation. The indicator is red when the transmitter RF is off.
2) **PA INDICATOR** –The PA indicator illuminates red if a fault is detected in the PA module. The indicator illuminates green during normal operation.
3) **VSWR INDICATOR** – The VSWR indicator illuminates red when a greater than 1.5:1 VSWR condition is detected. The indicator illuminates green during normal operation.
4) **PS INDICATOR** –The PS indicator illuminates red if a fault is detected in the PA power supply module. The indicator illuminates green during normal operation.

©2013 Broadcast Electronics

6 STXLP-2kW, STXLP-3kW, And STXLP-5kW Combiner Assembly Front Panel Features

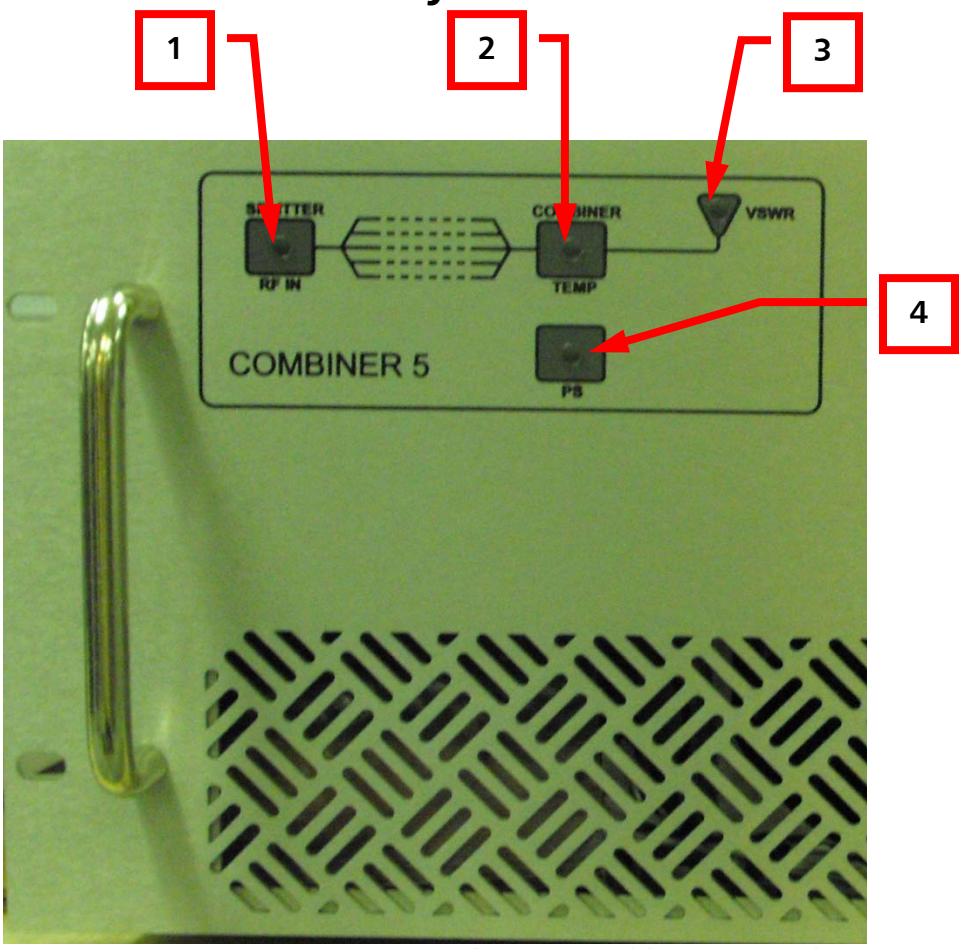

Figure 6-1: STXLP Combiner Assembly Front Panel Features

1) **SPLITTER RF IN INDICATOR** – The splitter RF in indicator illuminates red if the RF input level is too low or high. The indicator illuminates green during normal operation. The indicator is red when the transmitter RF is off.
2) **COMBINER TEMP INDICATOR** –The combiner temp indicator illuminates red if the combiner temperature is above 91 degrees C. The indicator illuminates green during normal operation.
3) **VSWR INDICATOR** – The VSWR indicator illuminates red when a greater than 1.5:1 VSWR condition is detected. The indicator illuminates green during normal operation.
4) **PS INDICATOR** –The PS indicator illuminates red if a fault is detected in the combiner +12V power supply module. The indicator illuminates green during normal operation.

©2013 Broadcast Electronics

7 Installation

7.1 Install Into Equipment Rack

CAUTION: EACH UNIT MUST HAVE REAR MOUNTING SUPPORT TO PREVENT DAMAGE.

7.2 1 kW Models -

The STXLP – 1kW assembly requires 3 rack units of space in a standard 19 inch E.I.A. rack. Overall installation information is presented in the installation drawing at the end of this guide. To install the unit proceed as follows:

1. Determine the location for the unit in the rack.
2. Refer to Figure 7-1 and install the unit in the rack using the mounting hardware located in the installation kit.
3. Refer to Figure 7-1 and install the rear mounting plates as shown. If the rack is not equipped with rear rails, modify the rack to provide rear support.

7.3 2 kW Models -

The STXLP – 2kW unit consists of: 1) one STXLP – 1kW transmitter assembly which is 3 rack units in height, 2) one amplifier assembly which is 3 rack units in height, and 3) a combiner assembly which is 4 rack units in height. Overall installation information is presented in the installation drawing at the end of this guide. To install the unit proceed as follows:

1. Determine the location for the unit in the rack.
2. Refer to Figure 7-1 and install the unit in the rack using the mounting hardware located in the installation kit.
3. Refer to Figure 7-1 and install the rear mounting plates as shown. If the rack is not equipped with rear rails, modify the rack to provide rear support.

7.4 3 kW Models -

The STXLP – 3kW unit consists of: 1) one STXLP – 1kW transmitter assembly which is 3 rack units in height, 2) 2 amplifier assemblies which are each 3 rack units in height, and 3) a combiner assembly which is 4 rack units in height. Overall installation information is presented in the installation drawing at the end of this guide. To install the unit proceed as follows:

1. Determine the location for the unit in the rack.
2. Refer to Figure 7-1 and install the unit in the rack using the mounting hardware located in the installation kit.
3. Refer to Figure 7-1 and install the rear mounting plates as shown. If the rack is not equipped with rear rails, modify the rack to provide rear support.

7.5 5 kW Models -

The STXLP – 5kW unit consists of: 1) one STXLP – 1kW transmitter assembly which is 3 rack units in height, 2) 4 amplifier assemblies which are each 3 rack units in height, and 3) a combiner assembly which is 4 rack units in height. Overall installation information is presented in the installation drawing at the end of this guide. To install the unit proceed as follows:

1. Determine the location for the unit in the rack.

©2013 Broadcast Electronics

2. Refer to Figure 7-1 and install the unit in the rack using the mounting hardware located in the installation kit.
3. Refer to Figure 7-1 and install the rear mounting plates as shown. If the rack is not equipped with rear rails, modify the rack to provide rear support.

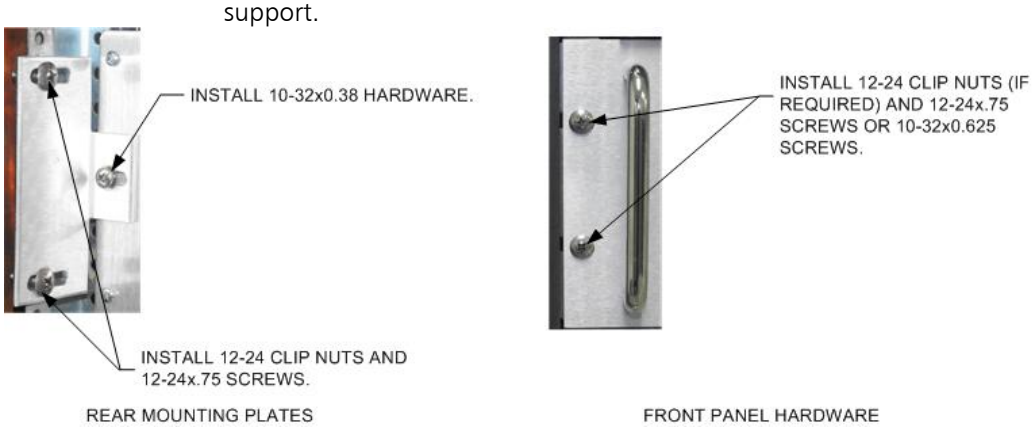

Figure 7-1: RACK INSTALLATION

7.6 RFI/EMI Protection - Ferrite Ring Installation

CAUTION: IT IS STRONGLY RECOMMENDED ALL TRANSMITTER INPUT/OUTPUT CABLES BE INSTALLED WITH FERRITE RINGS FOR RFI/EMI PROTECTION.

The following text presents the procedures to connect audio, Ethernet, input/output, sample, and interconnect (for STXLP 2kW, 3kW, and STXLP-5kW models) cables to the transmitter. It is strongly recommended the cables be installed with Ferrite rings for RFI/EMI protection (refer to Figure 7-2). Ensure Ferrite rings are used with the cable installations.

7.7 AES Connections – Requires Optional Stereo Generator PCB

If the transmitter is equipped with the optional stereo generator circuit board, an AES source can be used for the audio input. Input level range is from -20 dbFS to 0 dbFS. -2 dbFS nominal. If AES audio is to be used –

1. Locate an XLR mating connector.
2. Attach the wires as follows –
   - Pin 1 – Ground
   - Pin 2 – Signal +
   - Pin 3 – Signal –
3. Refer to Figure 5 and connect the cable to the AES connector.

7.8 ANALOG L/R Connections – Requires Optional Stereo Generator PCB

If the transmitter is equipped with the optional stereo generator circuit board, an analog L/R source can be used for the audio input. Input level range is from -15 dBm to +15 dBm. +10 dbm nominal. If analog L/R audio is to be used –

1. Locate 2 XLR mating connectors.
2. Attach the left channel wires as follows –
   - Pin 1 – Ground
   - Pin 2 – Signal +

©2013 Broadcast Electronics

- Pin 3 – Signal –

3. Refer to Figure 5 and connect the cable to the LEFT connector.
4. Repeat the procedure for the right channel.

©2013 Broadcast Electronics

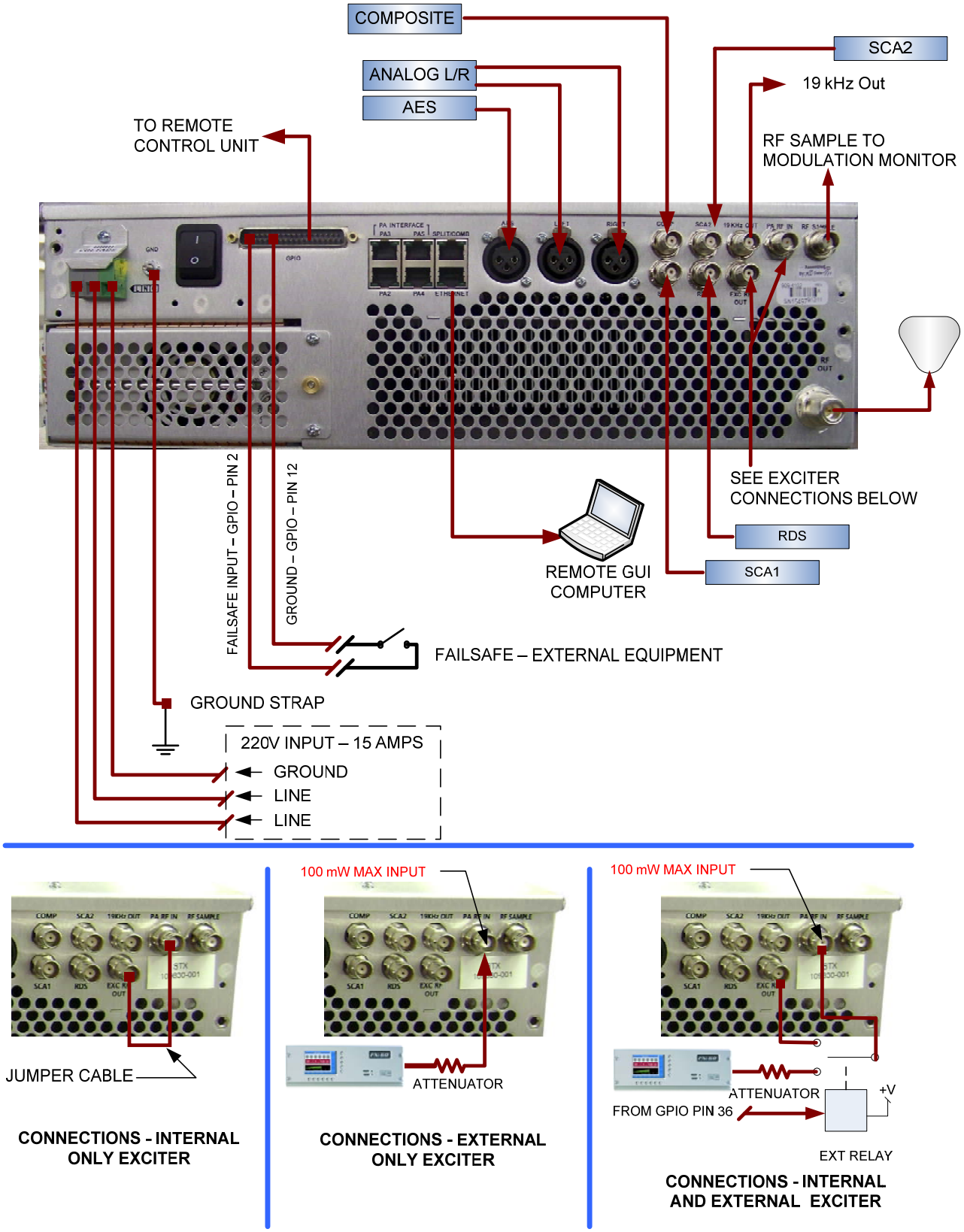

Figure 7-2: STXLP Connections (Sheet 1 of 2)

©2013 Broadcast Electronics

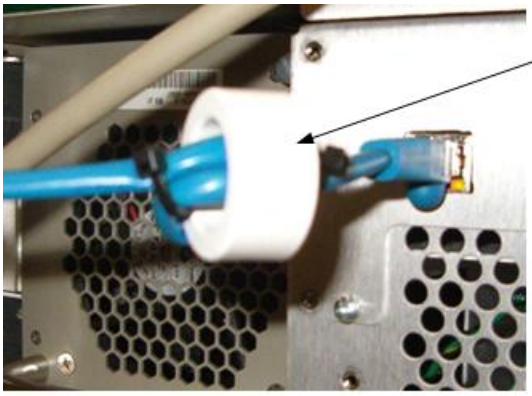

NOTES –
It is strongly recommended all interface cabling be installed with Ferrite Rings such as BEI P/N 375-0009. Minimum of 2 wraps.
Install the Ferrite rings for the following cables –
1. General Purpose Input/Output (GPIO).
2. Ethernet.
2. Audio (Composite, AES, and Analog).
3. SCA1.
4. SCA2.
5. RDS.
6. 19 kHz Out.
7. RF Sample.
8. For STXLP-3kW/STXLP-5kW Models - Interconnecting Ethernet cables between the main control unit/ PA Only units/combiner (if not provided by the factory).

Figure 7-3: STXLP Connections (Sheet 2 of 2)

7.9 Composite Connections

If a composite audio source is to be used, refer to Figure 5 and connect a BNC cable from the source to the COMP connector. Input level range is from -15 dBm to +15 dBm. 3.5 Vpp nominal.

7.10 SCA1 Connections

If an SCA is to be used, refer to Figure 5 and connect a BNC cable from the source to the SCA1 connector. Input level range is from -20 dBm to +15 dBm. 3.5 Vpp nominal.

7.11 SCA2 Connections

If a second SCA is to be used, refer to Figure 5 and connect a BNC cable from the source to the SCA2 connector. Input level range is from -20 dBm to +15 dBm. 3.5 Vpp nominal.

7.12 RDS Connections

If an RDS generator is to be used, refer to Figure 5 and connect a BNC cable from the source to the RDS connector. Input level range is from -20 dBm to +15 dBm. 3.5 Vpp nominal.

7.13 19 kHz Out Connections

If the unit is equipped with the optional stereo generator board and a 19 kHz pilot signal is required, refer to Figure 5 and connect a BNC cable from 19 kHz OUT connector and the source equipment. Output level is 1 Vpp.

7.14 Exciter - Using Only the Internal Exciter

If only the internal exciter is to be used, refer to Figure 5 and ensure the jumper cable is connected between the EXC RF OUT and the PA RF IN connectors.

7.15 Exciter - Using Only the External Exciter

CAUTION: TO PREVENT DAMAGE TO THE PA, DO NOT OVERDRIVE THE INPUT.

If only an external exciter is to be used, refer to Figure 7-2 and perform the following procedure. If the external exciter is an FXI-60 /FXI-250, refer to the FXI-60/FXI-250 connection diagram at the end of this manual for additional connection information.

©2013 Broadcast Electronics

1. Remove the cable between the EXC RF OUT and PA RF IN connectors.
2. If the exciter RF output power cannot be lowered to 100 mW or below, connect an attenuator to the exciter RF output.
3. Connect the external exciter to the PA RF IN connector. The maximum PA RF input level is 100 mW.

ATTENUATOR	POWER RATIO
-3 dB	.5
-6 dB	.25
-10 dB	.1
-20 dB	.01

7.16 Exciter - Using Both the Internal and External Exciter

CAUTION: TO PREVENT DAMAGE TO THE PA, DO NOT OVERDRIVE THE INPUT.

If both the internal exciter and an external exciter are to be used, an external relay must be used. Refer to Figure 7-2 and perform the following procedure. If the external exciter is an FXI-60/FXI-250, refer to the FXI-60/FXI-250 connection diagram at the end of this manual for additional connection information.

1. Remove the cable between the EXC RF OUT and PA RF IN connectors.
2. If the exciter RF output power cannot be lowered to 100 mW or below, connect an attenuator to the exciter RF output.
3. Connect a BNC cable between the EXC RF OUT connector and one of the relay terminals.
4. Connect a cable between the external exciter RF output connector (attenuator if required) and the other relay terminal.
5. Connect a cable between the common relay terminal and the PA RF IN connector.

7.17 Ethernet Connections

The STXLP transmitter is equipped with an Ethernet port. This port allows the transmitter to be monitored and controlled by the built in web interface or by the optional STXLP RGUI (Remote Graphical User Interface) remote control system. The port requires a standard RJ45 patch cable. If Ethernet control of the transmitter is desired, refer to Figure 7-2 and connect a standard RJ45 patch cable between the ETHERNET connector and a computer or hub.

NOTE: TO ENSURE OPERATIONAL INTEGRITY OF THE STX LP TRANSMITTER WHILE USING IP CONTROL, IT IS STRONGLY RECOMMENDED THAT THE UNIT BE INSTALLED ON A PRIVATE NETWORK, BEHIND A FIREWALL, WITH SECURED VIRTUAL PRIVATE NETWORK (VPN) ACCESS.

7.18 Remote Control Unit Connections

The GPIO connector provides the interface of control and status signals to a remote control unit (refer to Figure 3-1). If remote control unit interfacing is desired, refer to Figure 3-1 and proceed as follows:

1. Refer to Tables 1 and 2 to determine the desired remote control/status signals to be connected.

©2013 Broadcast Electronics

2. Solder the wires in the cable to the mating connector located in the installation kit.
3. Connect the cable the GPIO connector.

7.19 Failsafe Connection

The failsafe input is located at GPIO pin 2. The input requires a ground (0 V) to close the failsafe connection. Refer to Figure 7-2 and proceed as follows:

1. Locate a ground pin such as pin 12 or 19.
2. Route the ground through external equipment such as a remote control system, external switch, or test load.
3. Connect the ground from the failsafe equipment to failsafe input GPIO pin 2.

7.20 RF Sample Connection

For STXLP – 1kW models, the BNC RF SAMPLE connector is for the connection of equipment such as a modulation monitor. The level is 2V RMS at 1kW. Refer to Figure 7-2 and connect the desired equipment. For 2 kW, 3 kW, and 5 kW models, the RF sample port is located on the combiner (refer to the installation diagram at the end of the manual). The level is 2V RMS at 2 kW for 2kW models, 3 kW for 3 kW models, and 5 kW for 5 kW models.

7.21 HD System Connections

The STXLP transmitter can be used with an external HD exciter to provide HD broadcast operation. Figure 7-4 presents the HD system connections. Refer to Figure 7-4 and connect the exciter to the transmitter as shown. If the HD exciter is an FXI-60/FXI-250, refer to the FXI-60/FXI-250 connection diagram at the end of this manual for additional connection information.

7.22 RF Out Connection

For STXLP - 1kW models, the TYPE N RF OUT connector is for the connection of the antenna or dummy load. Refer to Figure 7-2 and connect the RF OUT connector to the antenna or dummy load. For STXLP 2kW, 3kW, and 5kW models, a 1 5/8 connector is for the connection of the antenna or dummy load. Refer to the connection diagram at the end of this manual and connect the RF OUT connector to the antenna or dummy load.

WARNING: USE THE RF CABLES SUPPLIED IN THE INSTALLATION KIT. IF THE CABLES ARE NOT USED, THE COMBINER COMPONENTS WILL BE DAMAGED.

7.23 RF/Control Connections – 2 kW Models

The STXLP – 2kW models require RF and control connections. Refer to the STX 2kW connection diagram at the end of this manual and connect the RF and control cables as shown. Ensure the splitter and combiner cables in the installation kit are used to connect the STXLP – 2kW components.

WARNING: USE THE RF CABLES SUPPLIED IN THE INSTALLATION KIT. IF THE CABLES ARE NOT USED, THE COMBINER COMPONENTS WILL BE DAMAGED.

©2013 Broadcast Electronics

7.24 RF/Control Connections – 3 kW Models

The STXLP – 3kW models require RF and control connections. Refer to the STX 3kW connection diagram at the end of this manual and connect the RF and control cables as shown. Ensure the splitter and combiner cables in the installation kit are used to connect the STXLP – 3kW components.

WARNING: USE THE RF CABLES SUPPLIED IN THE INSTALLATION KIT. IF THE DAMAGED.

7.25 RF/Control Connections – 5 kW Models

The STXLP – 5kW models require RF and control connections. Refer to the STX 5kW connection diagram at the end of this manual the RF and control cables as shown. Ensure the splitter and combiner cables in the installation kit are used to connect the STXLP – 5kW components.

7.26 Ground Connection

WARNING: ENSURE AN EARTH GROUND CONDUCTOR IS SECURLEY CONNECTED TO THE CHASSIS GROUND TERMINAL.

Each STXLP transmitter model requires ground connections. For STXLP 1kW models, refer to Figure 7-2 and connect an earth ground to the GND terminal. For STXLP 3kW and 5kW models, each component chassis is equipped with a ground terminal. Refer to the installation drawings at the end of this manual and connect an earth ground to each component.

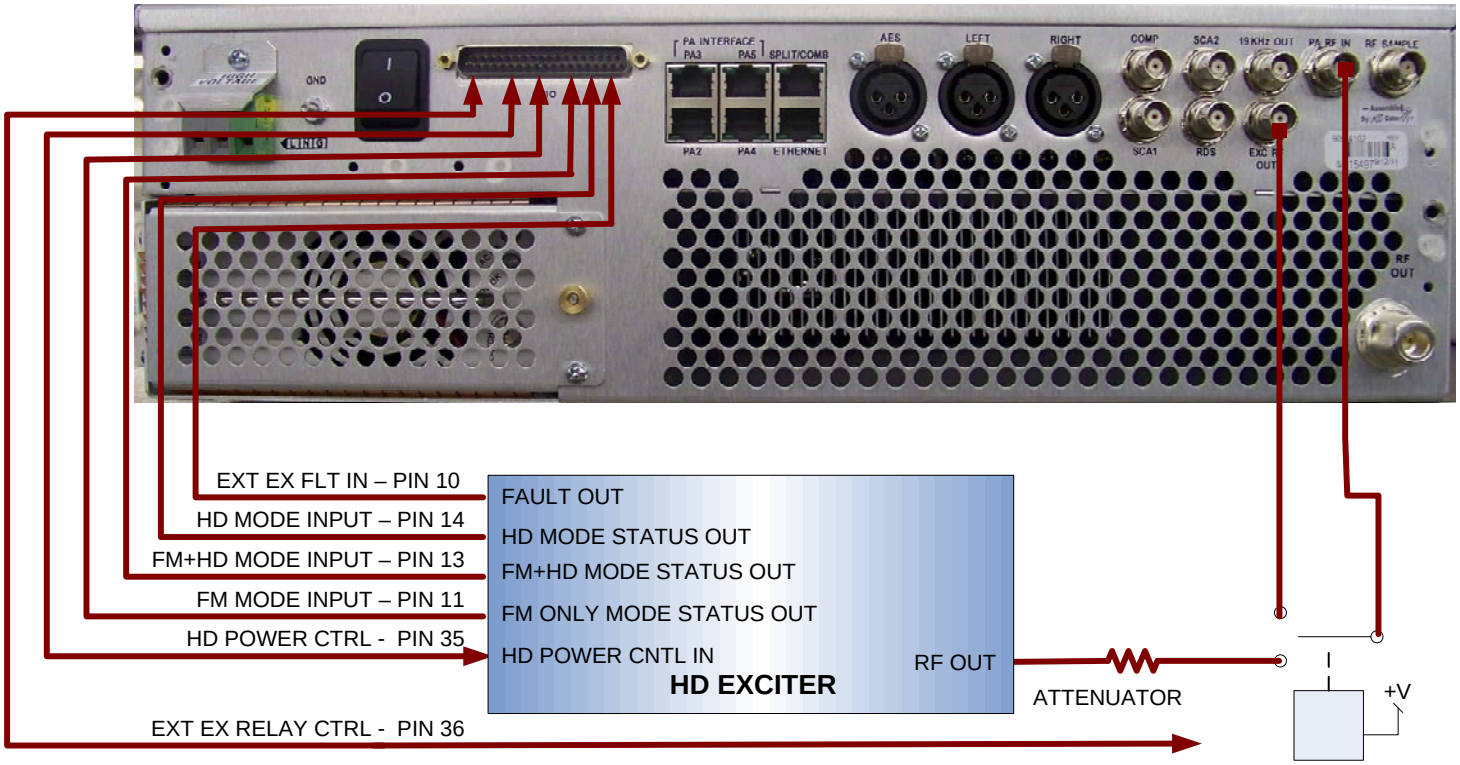

Figure 7-4 HD SYSTEM CONNECTIONS

WARNING: ENSURE ALL PRIMARY POWER IS DISCONNECTED BEFORE PROCEEDING

7.27 AC Input Connection

The STXLP 1kW and 2kW units will operate from a 180V to 260V AC 47 to 63 Hz single phase power source. The STXLP 3kW and 5kW units will operate from a 180V to 260V AC 47 to 63 Hz single phase power source or 311V to 449V AC 47 to 63 three phase power source. To connect AC to the unit, and proceed as follows:

7.28 1 kW Models -

1. Operate the ON/OFF switch to OFF.
2. Locate an AC cable of the appropriate current capacity for the AC input to be used.
3. Remove the ac guard.
4. Refer to Figure 7-2 and connect the cable to the STXLP rear panel AC input terminals.
5. Replace the ac guard.

7.29 2 kW Models –

1. Main AC input information is presented in the installation diagram at the end of this manual.
2. On the combiner chassis, operate the ON/OFF switch to OFF.
3. Locate an AC cable of the appropriate current capacity for the AC input to be used.
4. Remove the ac guard.
5. Refer to the installation diagram at the end of this manual and connect the cable to the STXLP rear panel AC input terminals.
6. Connect the wiring to an ac breaker as shown.
7. Replace the ac guard.
8. Repeat the procedure for the 1 kW main control unit and the PA unit.

7.30 3 kW Models –

1. Main AC input information is presented in the installation diagram at the end of this manual. If the unit is to be operated from a three phase power source, acceptable three phase power information is presented in the three phase power source diagram at the end of this manual. Refer to these diagrams for main AC input information.
2. On the combiner chassis, operate the ON/OFF switch to OFF.
3. Locate an AC cable of the appropriate current capacity for the AC input to be used.
4. Remove the ac guard.
5. Refer to the installation diagram at the end of this manual and connect the cable to the STXLP rear panel AC input terminals.
6. Connect the wiring to an ac breaker as shown.
7. Replace the ac guard.
8. Repeat the procedure for the 1 kW main control unit and the 2 PA units.

7.31 5 kW Models –

1. Main AC input information is presented in the installation diagram at the end of this manual. If the unit is to be operated from a three phase

©2013 Broadcast Electronics

power source, acceptable three phase power information is presented in the three phase power source diagram at the end of this manual. Refer to these diagrams for main AC input information.

2. On the combiner chassis, operate the ON/OFF switch to OFF.
3. Locate an AC cable of the appropriate current capacity for the AC input to be used.
4. Remove the ac guard.
5. Refer to the installation diagram at the end of this manual and connect the cable to the STXLP rear panel AC input terminals.
6. Connect the wiring to an ac breaker as shown.
7. Replace the ac guard.
8. Repeat the procedure for the 1 kW main control unit and the 4 PA units.

©2013 Broadcast Electronics

8 Initial Turn On and Setup

8.1 Overview

The following section will present the procedures to initially turn on and setup the transmitter. Information on the STXLP operating menus is presented in a menu tree at the end of this manual.

8.2 Initial AC On

NOTE: FOR ALL MODELS, ENSURE ALL TRANSMITTER INDIVIDUAL UNIT CIRCUIT BREAKERS AND ON/OFF SWITCHES ARE OPERATED TO ON.

1. For STX-1kW models, operate the circuit breaker to ON and operate the ON/OFF switch to ON. For STX-2kW, STX-3kW, and STX-5kW models, operate all individual unit circuit breakers to ON and operate all individual unit ON/OFF switches to ON.
   The front panel LCD will illuminate.

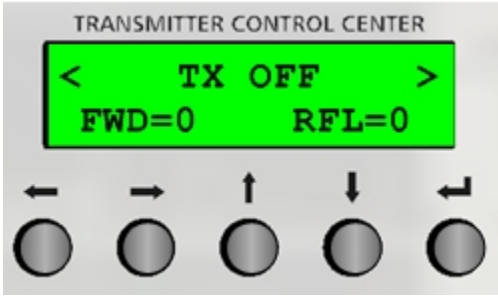

8.3 Set The Power Output

1. Depress the ↓ Button to display the Power Set menu. Power is adjusted by: 1) selecting the desired power mode, 2) accessing the digit using the →← buttons, 3) using the ↓ ↑ buttons to change the value. The power ranges are shown below.

MODEL	FM ONLY - WATTS	FM+HD - WATTS	HD ONLY - WATTS
STXLP -1kW	250 to 1100	175 to 770	75 to 330
STXLP -2kW	500 to 2000	350 to 1280	150 to 600
STXLP -3kW	750 to 3000	525 to 1920	225 to 900
STXLP -5kW	1250 to 5000	875 to 3200	375 to 1500

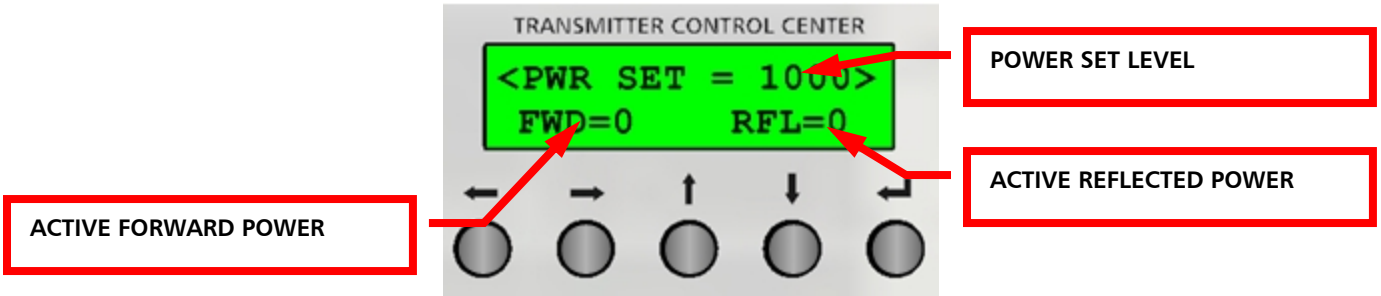

©2013 Broadcast Electronics

2. Depress ↵.
   The Power Set select menu will appear.

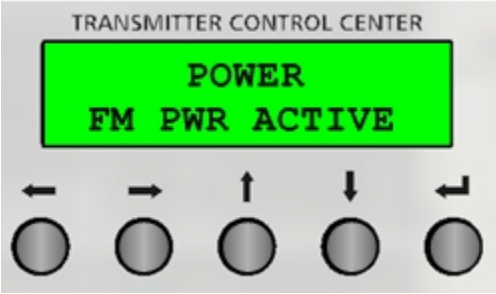

3. Select the mode of operation for the power setting using the ↓↑ buttons.
   The modes are FM ONLY PWR, HD ONLY PWR, and FM+HD PWR.
4. Depress ↵.
   The Power menu will change to the power set mode.

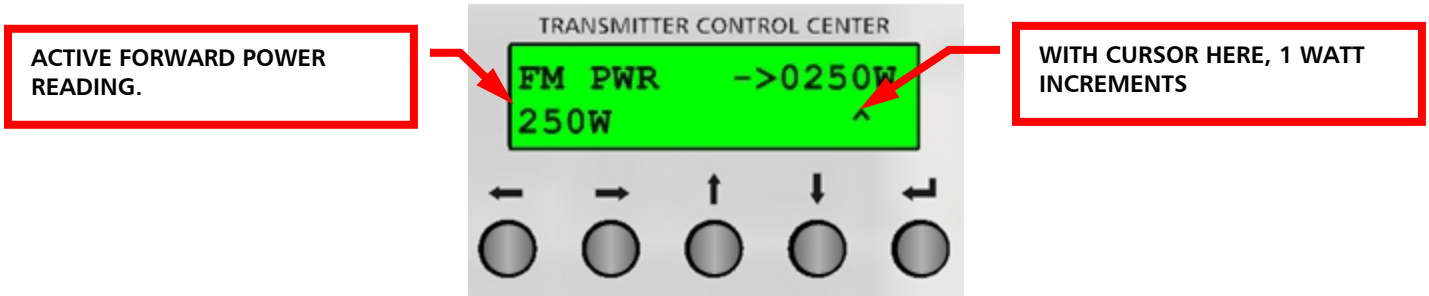

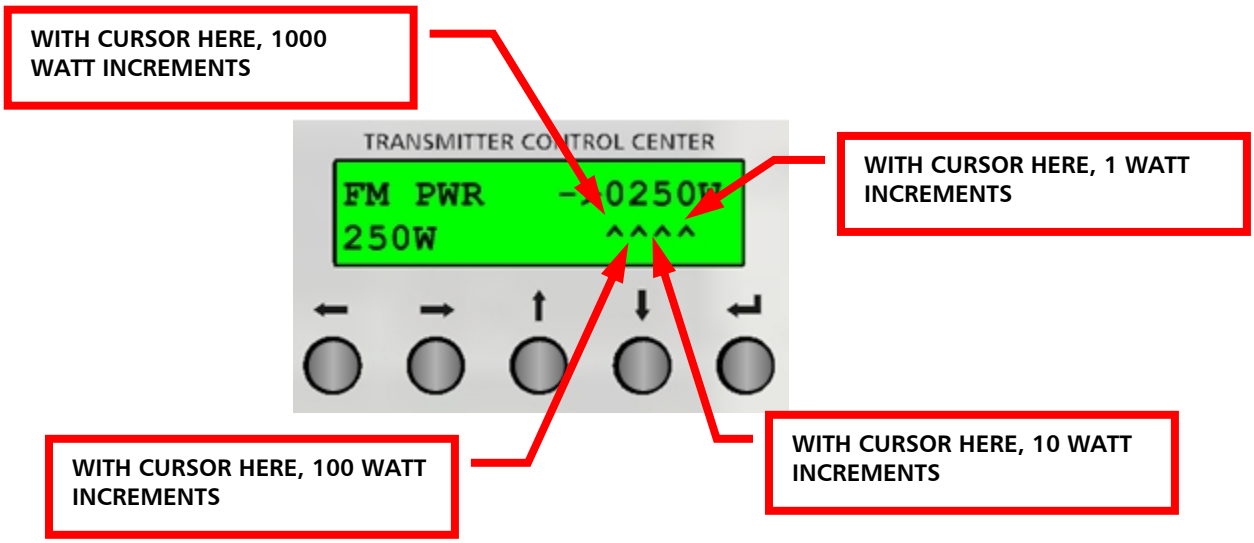

5. With the cursor in the 1 Watt position, use ↓ ↑ to change the power in 1 Watt increments. The number will not change if an upper/lower power limit is reached.
6. Depress ← .
   The cursor moves to the 10 Watt position.
7. Use ↓ ↑ to change the power in 10 Watt increments. The number will not change if an upper/lower power limit is reached.
8. Depress ← .
   The cursor moves to the 100 Watt position.
9. Use ↓ ↑ to change the power in 100 Watt increments. The number will not change if an upper/lower power limit is reached.
10. Depress ← .
    The cursor moves to the 1000 Watt position. The number will not change if an upper/lower power limit is reached.
11. Use ↓ ↑ to change the power in 1000 Watt increments. The number will not change if an upper/lower power limit is reached.
12. Depress ↵.
    The Power setting will be saved.
13. If required, repeat the procedure for the HD ONLY and FM+HD modes of operation.

8.4 Set The Frequency

1. Depress ↓ to display the Frequency menu.
   The Frequency menu will appear.

©2013 Broadcast Electronics

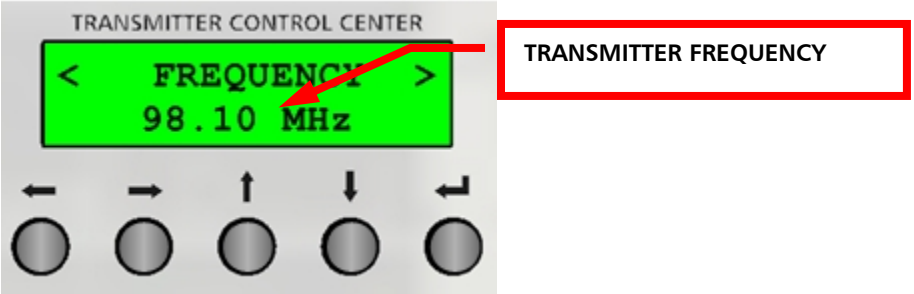

2. Depress ↵.
   The Frequency menu will change to the frequency set mode.

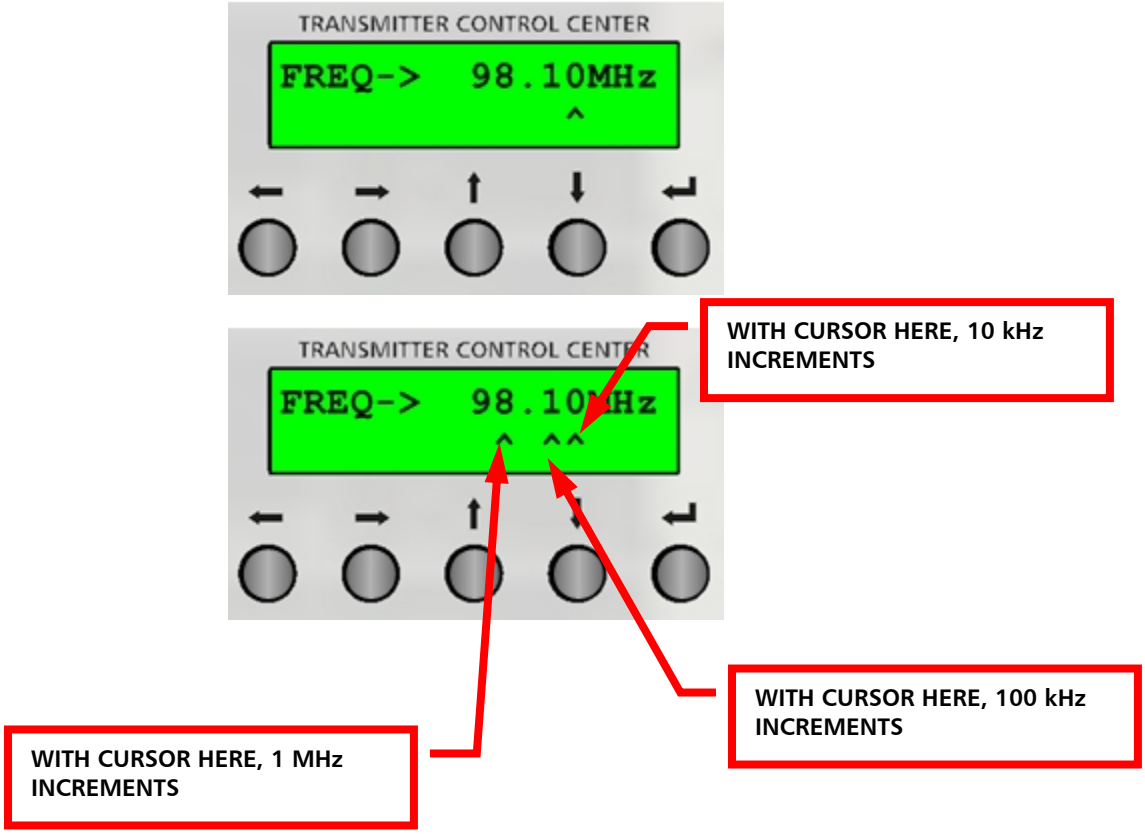

3. With the cursor in the 10 kHz position, use ↓ ↑ to set the 10 kHz position of the frequency. The number will not change if an upper/lower frequency limit is reached.
4. Depress ← .
   The cursor moves to the 100 kHz position.
5. With the cursor in the 100 kHz position, use ↓ ↑ to set the 100 kHz position of the frequency. The number will not change if an upper/lower frequency limit is reached.
6. Depress ← .
   The cursor moves to the 1 MHz position.

©2013 Broadcast Electronics

7. With the cursor in the 1 MHz position, use ↓ ↑ to set the 1 MHz position of the frequency. The number will not change if an upper/lower frequency limit is reached.
8. Depress ↵.
   The frequency will be saved.

8.5 Select The Audio Input.

1. Depress ↓ to display the Audio Input menu.
   The Audio menu will appear.

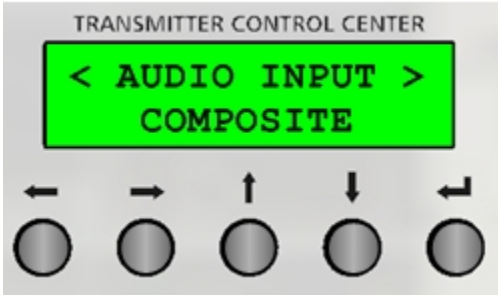

2. Depress ↵.
   The Audio Input menu will change to the audio input select mode.

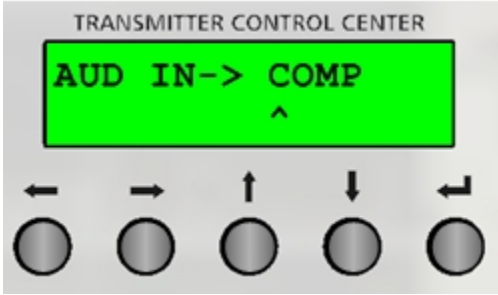

.

3. Use ↓ ↑ to select the audio input. If the unit is not equipped with the optional stereo generator board, the transmitter is equipped with only a composite input. If the unit is equipped with the board, select between COMPOSITE, AES, or ANALOG.
4. Depress ↵.
   The audio input will be saved.

8.6 Calibrate the Audio/SCA/RDS Inputs

Once the input is selected, the inputs must be calibrated. The following procedure presents the calibration of the external composite input. The AES input calibration is identical to the external composite. The Analog input will require one additional input level calibration. If the optional stereo board is not present, some of the menus will present N/A (not applicable).

©2013 Broadcast Electronics

The procedures turn off all inputs with the exception of the source to be calibrated. Therefore, the unit must be removed from on-air operation. If SCA/RDS signals are used, the user must reduce the main channel audio level manually to prevent over modulation. The steps required to calibrate inputs are:

- Calibrate the main channel audio (example composite). If the analog input is selected, an additional input level calibration is required.
- Perform the deviation calibration if required.
- Calibrate the SCA/RDS inputs.

1 - CALIBRATE THE AUDIO INPUT -

1. Apply the nominal signal to the selected input. Ensure no SCA/RDS signals are applied.
2. Depress ↓ to display the audio cal menu.
   The audio calibration menu will appear.

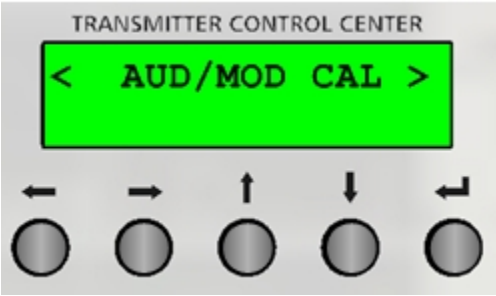

3. Depress ↵.
   A calibration menu will appear.
4. Use ↓ ↑ to select ext composite cal.

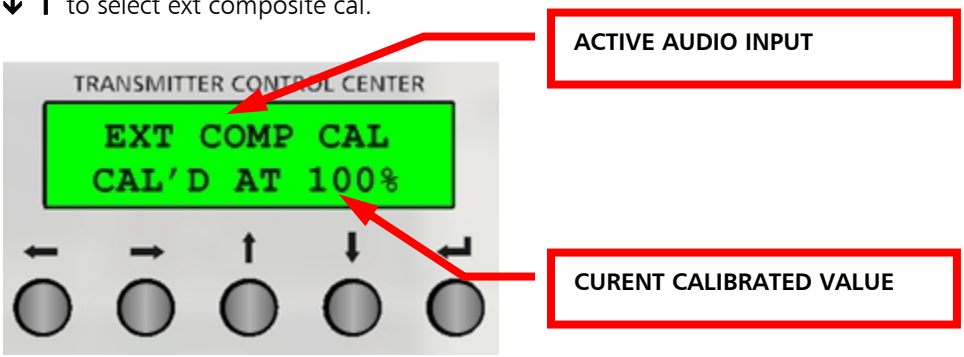

5. Depress ↵.
   The edit calibration menu will appear

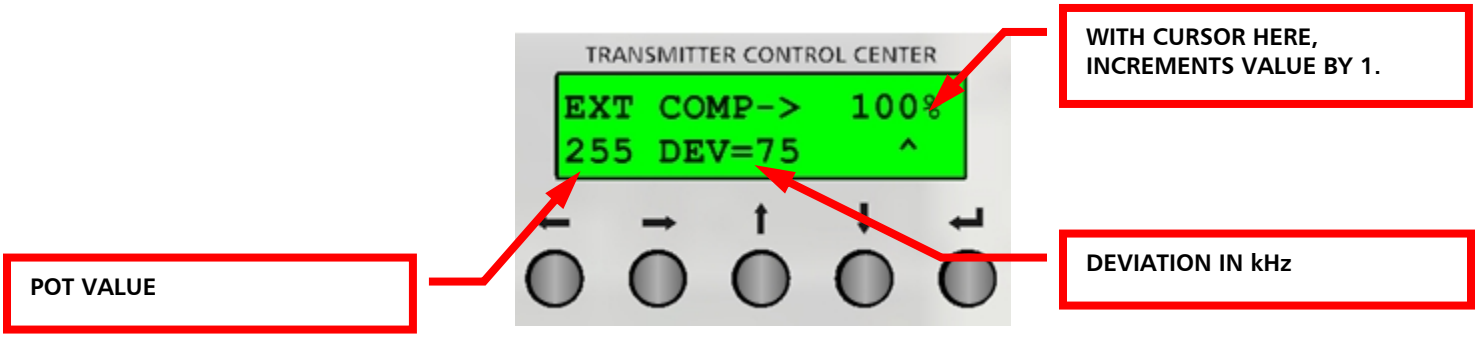

6. With the cursor in the 1's position, use ↓ ↑ to set the desired value. The number will not change if an upper/lower level limit is reached. If SCA/RDS and pilot signals are to be used, ensure the audio level is lower than 100% to allow the total deviation to be 100% when the SCA/RDS/pilot signals are added.
7. Depress ↵.
   The calibration will be saved and the calibration menu will appear.

2 – DEVIATION CALIBRATION –

The deviation calibration is performed at the factory for the desired deviation. The deviation must be re-calibrated if:

- The deviation changes to a value not calibrated at the factory.
- The frequency changes.

1. Connect an external modulation meter to the RF SAMPLE connector.
2. Set the deviation jumper to the correct position for the desired deviation.

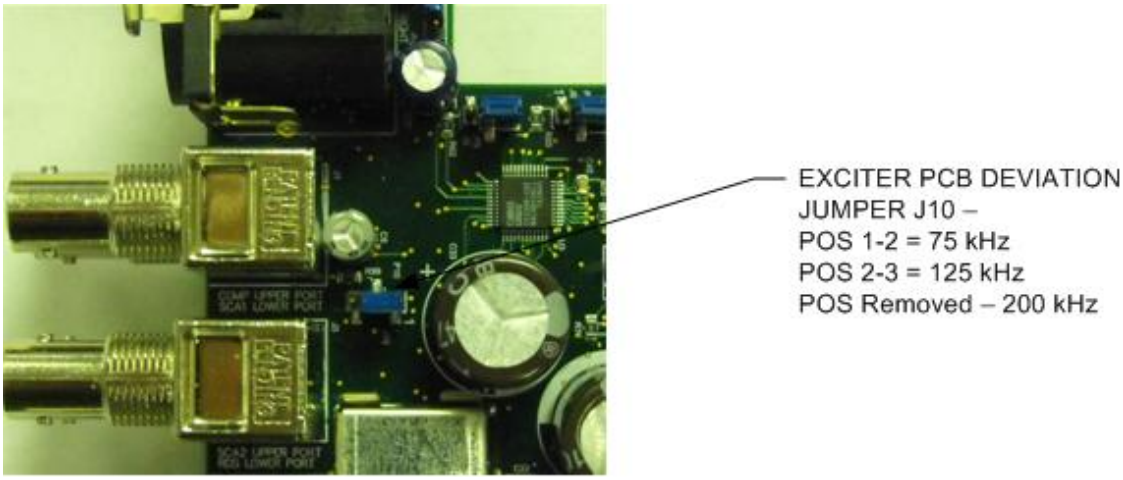

3. Connect an external composite source to the unit at a level of 3.5V p-p. If an external composite source is not available, use an AES or analog source.
4. Ensure the audio source to be used is selected as the input (refer to Select The Audio Input above if required).
5. Depress ↓ to display the audio cal menu.
   The audio calibration menu will appear.

©2013 Broadcast Electronics

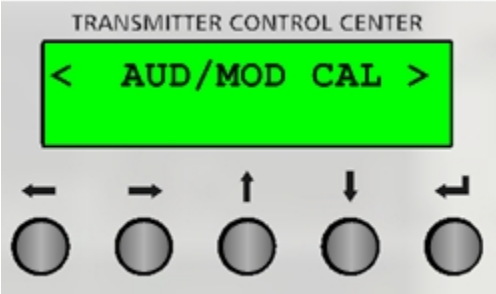

6. Depress ↵.
   A calibration menu will appear.
7. Use ↓ ↑ to select the deviation cal menu.

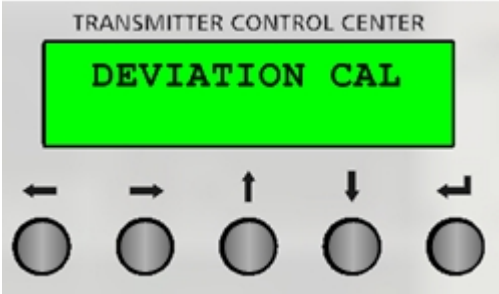

8. Depress ↵.
   The deviation edit menu will appear .

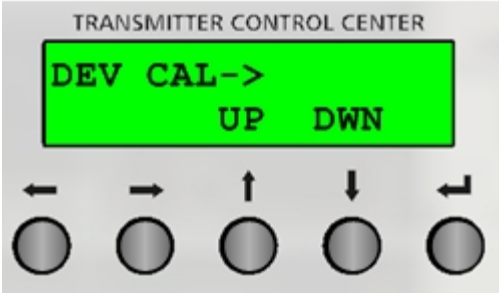

9. Use ↓ ↑ to adjust the level for the selected deviation on the external meter.
10. Depress ↵.
    The calibration will be saved.

3 - REPEAT FOR AES AND ANALOG L/R -

If the optional stereo generator board is installed, repeat the above procedure for the AES input. If the analog input is to be calibrated, the analog input level must be calibrated. To calibrate the input level, proceed as follows:

1. Apply the highest peak level audio to the analog input. Ensure no other signals are applied.
2. Depress ↓ to display the audio cal menu.
   The audio calibration menu will appear.

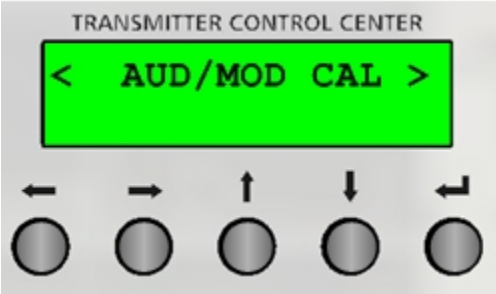

3. Depress ↵.
   A calibration menu will appear.
4. Use ↓ ↑ to select left/right input cal.

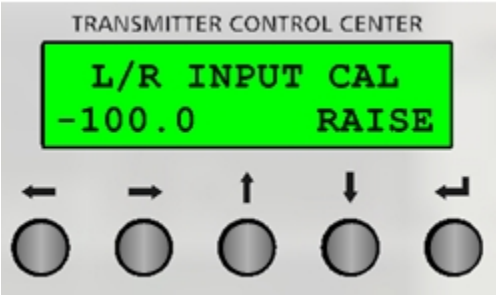

5. Depress ↵.
   The edit left/right input calibration menu will appear.

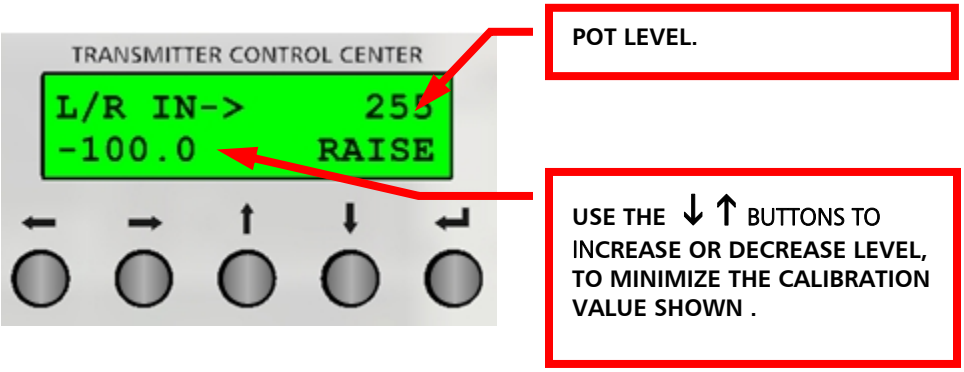

6. Check the left/right input level indication. The indication will present: 1) lower level or 2) raise level. Use ↓ ↑ to increase/decrease the pot level to minimize the calibration value shown. The value should be near 0.
7. Depress ↵.
   The calibration will be saved.
8. Once the left/right input cal is finished, repeat the CALIBRATE THE AUDIO INPUT procedure for the left/right input.

©2013 Broadcast Electronics

4 - IF SCA/RDS SYSTEMS ARE USED -

1. If SCA systems are to be used, remove the audio input signal and apply the SCA1 signal. Only the SCA1 signal must be present.
2. Depress ↓ ↑ to display the audio calibration menu.
3. Depress ↵.
4. Depress ↓ to display the SCA1 calibration menu.
   The SCA1 calibration menu will appear.

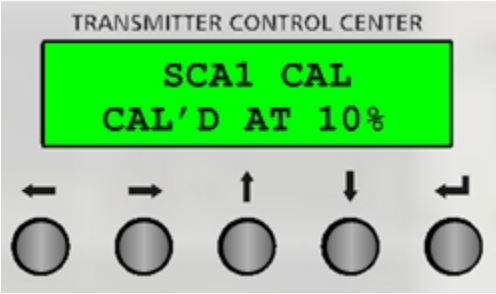

5. Depress ↵.
   The SCA1 edit calibration menu will appear.

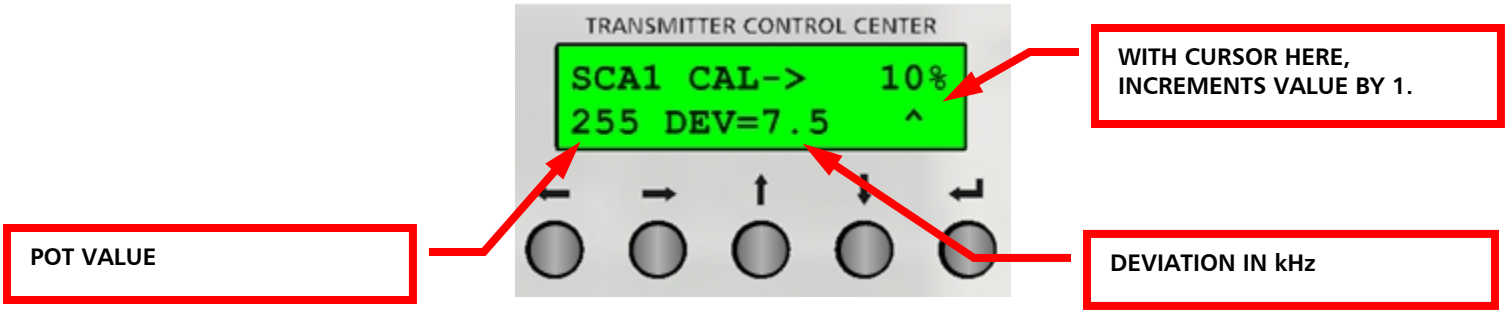

6. With the cursor in the 1's position, use ↓ ↑ to set the desired value. The number will not change if an upper/lower level limit is reached.
7. Depress ↵.
   The calibration will be saved.
8. Remove the SCA1 signal. Repeat the procedure if SCA2 and RDS systems are to be used. Use ↓ ↑ to select the desired SCA/RDS input.

8.7 Audio Input Level Menu

Once each audio input level has been calibrated, the Audio Input level menu allows each individual input to be adjusted. For units without the optional stereo generator board, the only input is COMPOSITE. For units with the stereo generator board, the input options are: 1) COMPOSITE, 2) AES, or 3) ANALOG L/R.

The following procedure sets the COMPOSITE input. The input level directly changes the modulation level. Therefore, the number entered is in percent of modulation.

©2013 Broadcast Electronics

1. Depress ↓ to display the Audio Input Level menu (audio source with a bargraph).
   The Audio input level menu will appear.

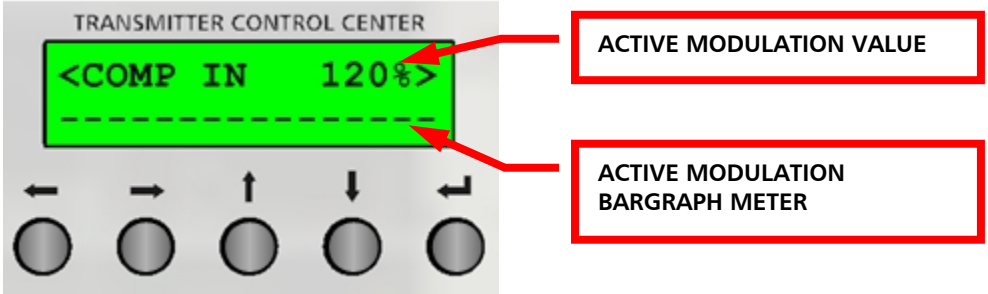

2. Depress ↵.
   The Audio Input Level menu will change to the audio input level set mode.

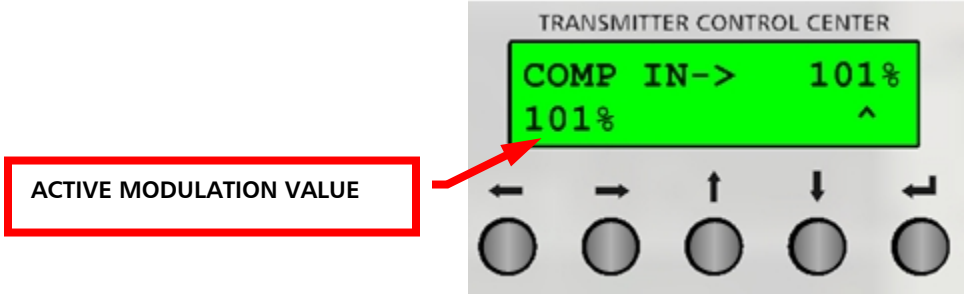

3. Use ↓ ↑ to set the desired input level. The number will not change if an upper/lower level limit is reached.
4. Depress ← .
   The composite input level will be saved.
5. Repeat the procedure for the AES and ANALOG L/R inputs.
   The Audio Input menu will change to the audio input select mode.

8.8 SCA/RDS Input Level Menu

Once each SCA/RDS input level has been calibrated, the SCA/RDS Level menu allows the SCA1, SCA2, and RDS inputs to be adjusted. The input level is adjusted using the ↓ ↑ buttons to change the value.

1. Depress ↓ to display the SCA/RDS LEVEL menu.
   The SCA/RDS Level menu will appear.
   The SCA/RDS Level menu will appear.

©2013 Broadcast Electronics

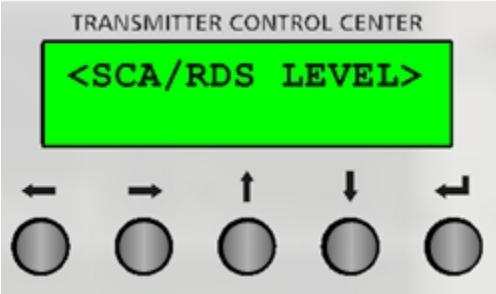

2. Depress ↵.
   The SCA/RDS Level select menu will appear.

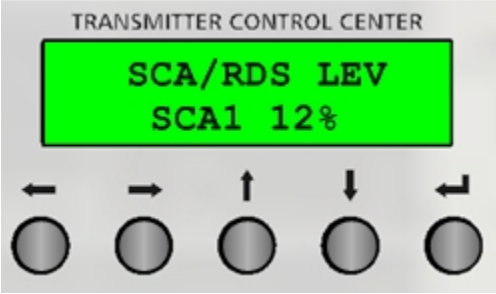

3. Depress ↵.
   The SCA1 level edit menu will appear.

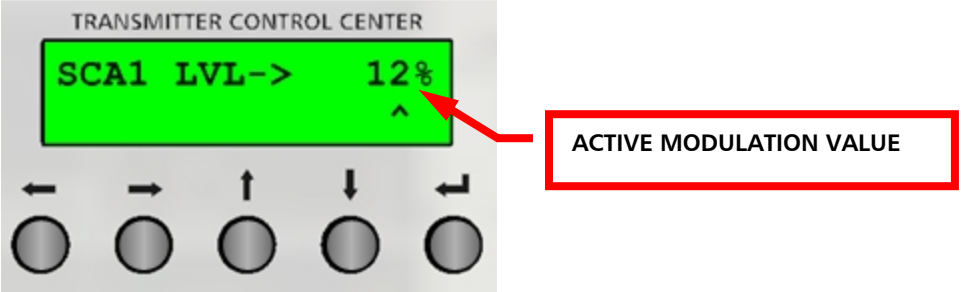

4. Use ↓ ↑ to set the input. The number will not change if an upper/lower level limit is reached.
5. Depress ↵.
   The SCA1 Level will be saved.
6. Repeat the procedure for the SCA2 and RDS inputs. Use the ↓ ↑ buttons to select the SCA2 or the RDS input.

8.9 Set The Preemphasis

If the optional stereo generator circuit board is installed, the Preemphasis must be set.

1. Depress ↓ to display the PreEmphasis menu.
   The Preemphasis menu will appear.

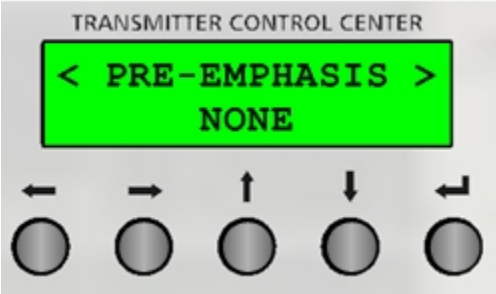

2. Depress ↵.
   The Preemphasis menu will change to the Preemphasis select mode.

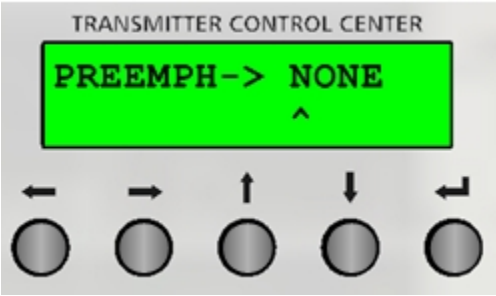

3. Use ↓ ↑ to select the preemphasis. Select between NONE, 50 uS, or 75 uS.
4. Depress ↵.
   The preemphasis will be saved.

8.10 Set The Pilot Level And Enable/Disable The Pilot

If the optional stereo generator circuit board is installed, the pilot level must be set. The pilot will be on when the unit is in stereo mode and off when the unit is in a mono mode. The pilot can also be enabled or disabled manually for testing using pilot on/off. This manual pilot override will be active until the unit ac power is cycled or the operator returns the pilot to normal operation. To disable the pilot during normal stereo operation, enter 0 for the pilot level.

1. Depress ↓ to display the Pilot menu.
   The Pilot menu will appear.

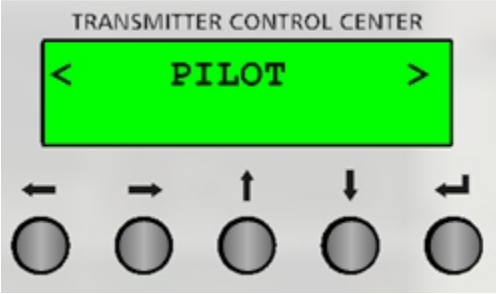

2. Depress ↵.
3. Use ↓ ↑ to select the level menu.

©2013 Broadcast Electronics

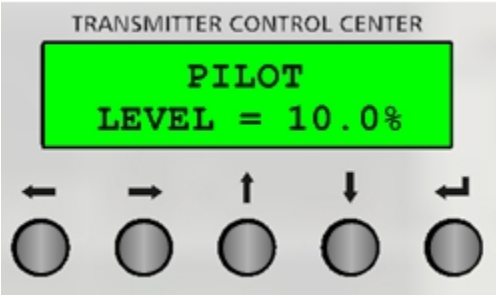

4. Depress ↵.
   The pilot edit level menu will appear.

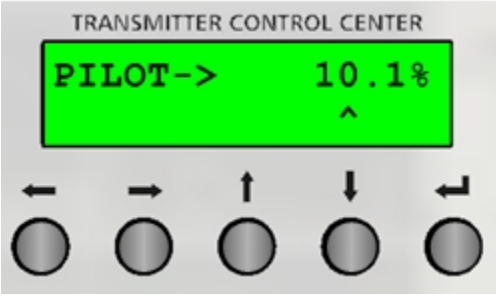

5. Use ↓ ↑ to set the input. To set the 10 % position, set level to 9 and select ↑ to increment. The number will not change if an upper/lower level limit is reached.
6. Depress ↵.
   The pilot level will be saved.
7. Use ↓ ↑ to select the pilot on/off menu.

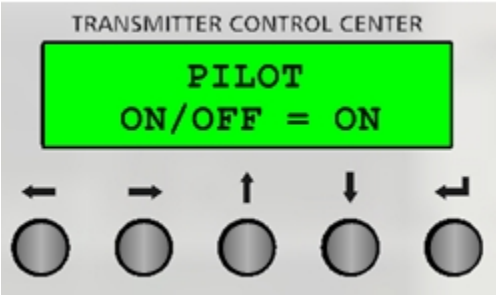

8. Depress ↵.
   The pilot on/off select menu will appear.

©2013 Broadcast Electronics

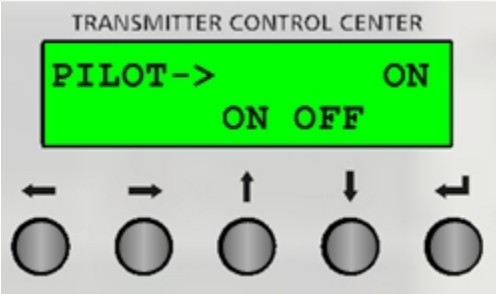

9. Use ↓ ↑ to enable or disable the pilot.
10. Depress ↵.
    The pilot selection will be saved.

8.11 Set The Mono/Stereo Mode

If the optional stereo generator circuit board is installed, the mono/stereo mode must be set. The pilot will be on when the unit is in stereo mode and off when the unit is in a mono mode. The pilot can also be enabled or disabled manually for testing using pilot on/off. This manual pilot override will be active until the unit ac power is cycled or the operator returns the pilot to normal operation. The mono/stereo options are: 1) mono L, 2) mono R, 3) mono L+R, and stereo. To set mode, proceed as follows:

1. Depress ↓ to display the Mono/St Mode menu.
   The Mono/St Mode menu will appear.

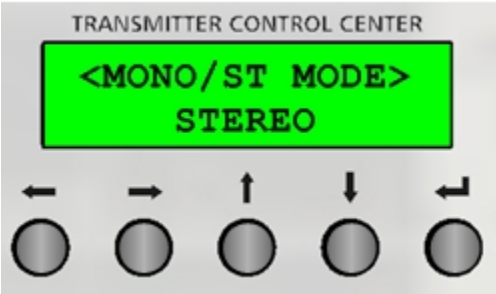

2. Depress ↵.
   The Mono/St Mode menu will appear.

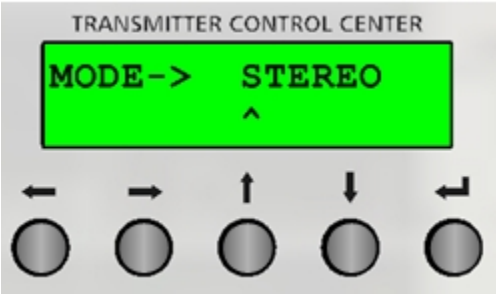

3. Use ↓ ↑ to select the mode. Select between STEREO, MONO L, MONO R, or MONO L+R.

©2013 Broadcast Electronics

4. Depress ↵.
   The Mono/St Mode will be saved.

8.12 Setup

The setup menu allows the user to: 1) select internal/external exciter, 2) transmitter type, 3) backup power setting, and 4) remote enable/disable.

1. Depress ↓ to display the Setup menu.
   The Setup menu will appear.

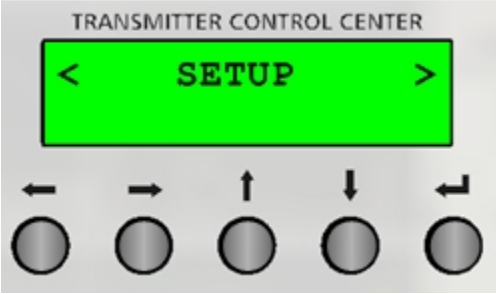

2. Depress ↵.
   The Setup menu will change to the transmitter type, int/ext exciter/emergency power select mode.

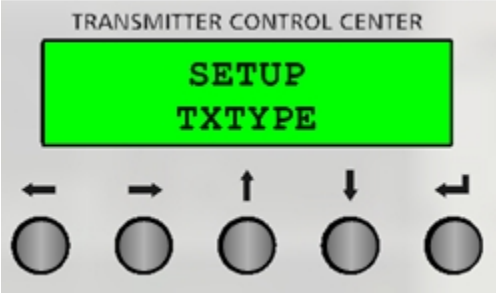

3. Depress ↵.
   The transmitter type menu will appear.

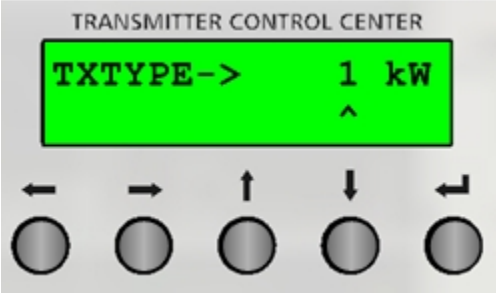

4. Use ↓ ↑ to select the transmitter type. Select between 1 kW, 2 kW, 3 kW, or 5 kW models.
5. Depress ↵.

©2013 Broadcast Electronics

The transmitter type will be saved.

6. Use ↓ ↑ to select Internal/External exciter.
   The following menu will appear.

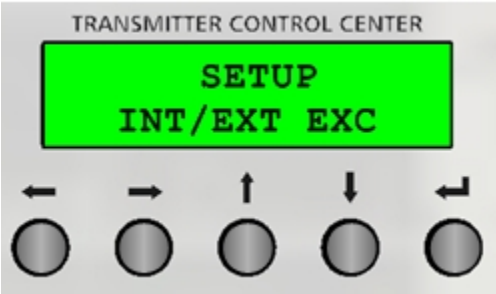

7. Depress ↵.
   The following menu will appear.

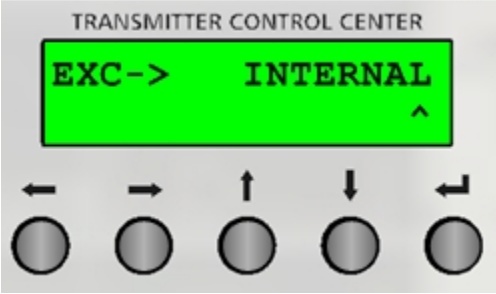

8. Use ↓ ↑ to select INTERNAL or EXTERNAL.
9. Depress ↵.
   The internal/external exciter selection will be saved.
10. Use ↓ ↑ to select Emergency Pwr
    The following menu will appear.

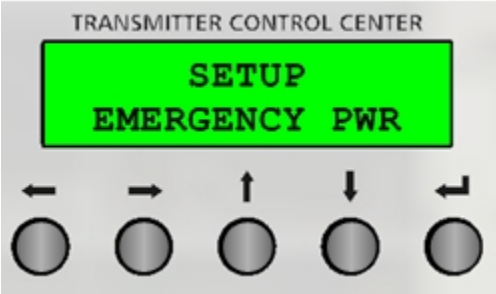

11. Depress ↵.
    The emergency power set menu will appear.

©2013 Broadcast Electronics

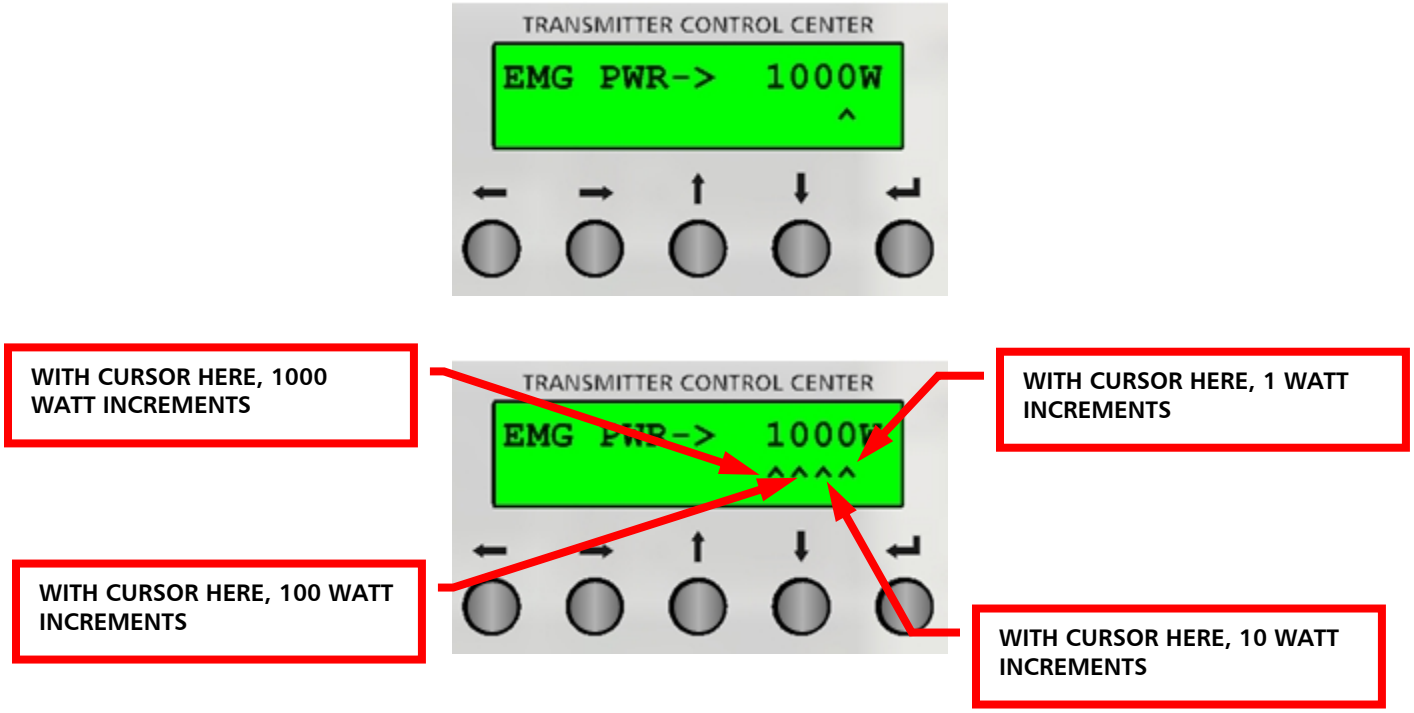

14. Depress ↵.

⚠ **CAUTION: FOR STXLP-5kW MODELS, IT IS RECOMMEND EMERGENCY POWER BE SET AT A MAXIMUM OF 3330W TO PREVENT DAMAGE TO THE COMBINER.**

12. For STXLP-5kW models, it is recommended emergency power be set at a maximum of 3330W. This will allow for a simultaneous controller and PA failure. The level can be increased if all PAs are operating normally. STXLP-1kW, 2kW, and 3kW models can be set using the entire emergency power range. Use the following steps to set the emergency power.
13. With the cursor in the 1 Watt position, use ↓ ↑ to change the power in 1 Watt increments. The number will not change if an upper/lower power limit is reached.
14. Depress ← .
    The cursor moves to the 10 Watt position.
15. Use ↓ ↑ to change the power in 10 Watt increments. The number will not change if an upper/lower power limit is reached.
16. Depress ← .
    The cursor moves to the 100 Watt position.
17. Use ↓ ↑ to change the power in 100 Watt increments. The number will not change if an upper/lower power limit is reached.
18. Depress ← .
    The cursor moves to the 1000 Watt position. The number will not change if an upper/lower power limit is reached.

©2013 Broadcast Electronics

19. Use ↓ ↑ to change the power in 1000 Watt increments. The number will not change if an upper/lower power limit is reached.
20. Depress ↵.
    The Emergency Power setting will be saved.
21. Use ↓ ↑ to select RMT EN/DIS. When disabled, the remote inputs and the I.P. inputs will be disabled. When enabled, the remote inputs and the I.P. inputs will be enabled.
    The following menu will appear.

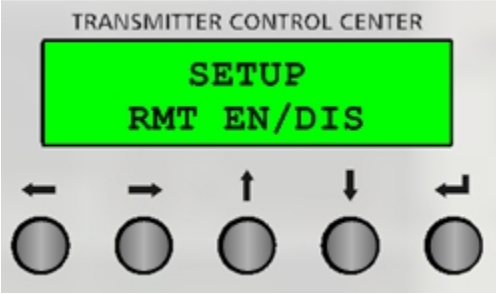

22. Depress ↵.
    The following menu will appear.

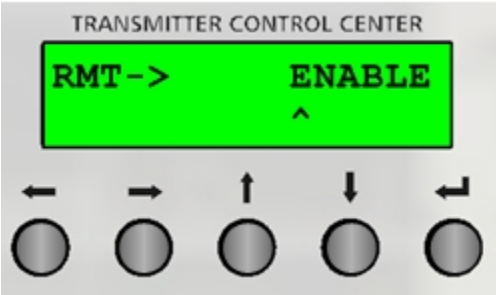

23. Use ↓ ↑ to select ENABLE or DISABLE.
24. Depress ↵.
    The enable/disable remote selection will be saved.

8.13 Diagnostics

The diagnostics/stats menu allows the user to view transmitter faults and reset a fault. The menu also allows the user to check transmitter stats. To check transmitter faults and stats, proceed as follows:

1. Depress ↓ to display the Diagnostics menu.
   The Diagnostics menu will appear.

©2013 Broadcast Electronics

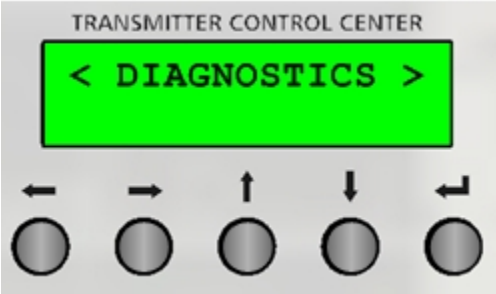

2. Depress ↵.
   The Diagnostics select menu will appear.

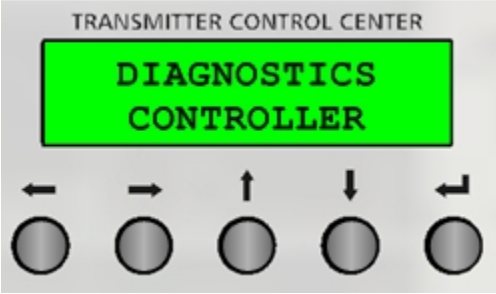

3. The ↓ ↑ buttons are used to select controller diagnostics.
4. Depress ↵.
   The Transmitter Diagnostics menu will appear.

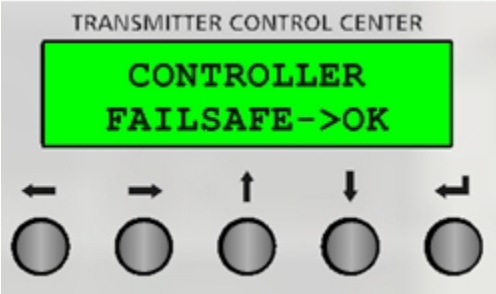

5. The transmitter diagnostics will present OK if no fault is present or FLT for active faults. Use ↓ ↑ to view the faults. The faults include –
   - Failsafe
   - PLL Fault
   - VSWR Shutdown
   - PA Fault
   - Exciter Fault
   - Active Exciter
   - External Exciter Status
   - External Exciter Mode
   - Audio Mode
   - Exciter Communication

©2013 Broadcast Electronics

6. Depress ↵.
   The Diagnostics menu will appear.
7. Use ↓ ↑ to select PA diagnostics. For STXLP 2 kW, 3 kW, and 5 kW models, additional PA modules will be available as selections.
   The PA1 Diagnostics menu will appear.

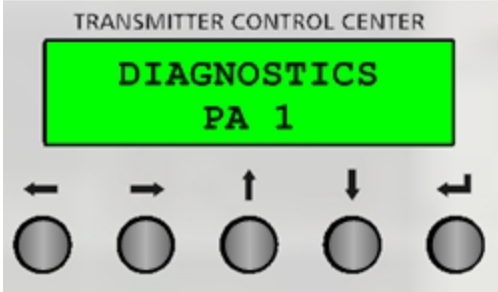

8. Depress ↵.
9. The PA diagnostics will present OK if no fault is present or FLT for active faults. Use ↓ ↑ to view the faults. The faults include –
   - VSWR Shutdown
   - VSWR Foldback
   - RF Input Fault
   - Power Supply Fault
   - Current Foldback
   - Temperature Fault
   - Temperature Foldback
10. Depress ↵.
11. For 2 kW, 3 kW, and 5 kW models the combiner faults can be viewed. The COMBINER diagnostics will present OK if no fault is present or FLT for active faults. Use ↓ ↑ to view the faults. The faults include –
    - RF Input Fault
    - Input overdrive Fault
    - Over Temperature Fault
    - VSWR Fault
    - Splitter Fault
12. The diagnostics menu allows a faults to be reset. To reset a fault, depress ↵.
    The Diagnostics menu will appear.
13. Use ↓ ↑ to select fault reset
    The fault reset menu will appear.

©2013 Broadcast Electronics

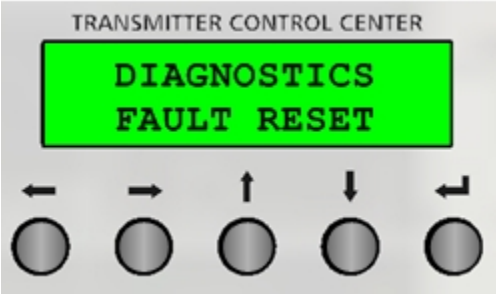

14. Depress ↵.
    The Diagnostics reset yes/no menu will appear.

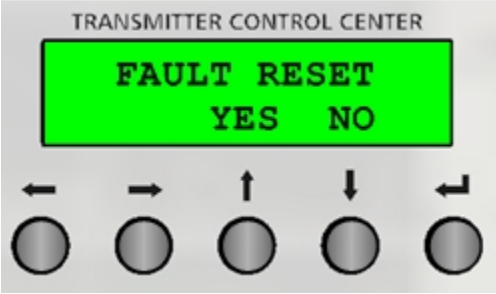

15. Use ↓ ↑ to select versions/jumpers.
    The transmitter versions/jumpers menu will appear.

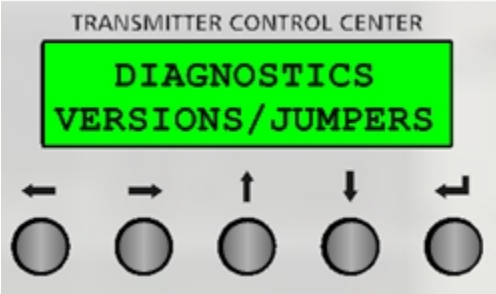

16. The stats menu allows the user to view the transmitter stats. Use ↓ ↑ to view the following stats –
    - 100% Modulation Jumper
    - Transmitter Serial Number
    - Controller Board Serial Number
    - Firmware Version

8.14 Ethernet Setup

The Ethernet menu allows the user to set the transmitter I.P., subnet mask, and gateway.

1. Depress ↓ to display the Ethernet/IP menu.
   The Ethernet/IP menu will appear.

©2013 Broadcast Electronics

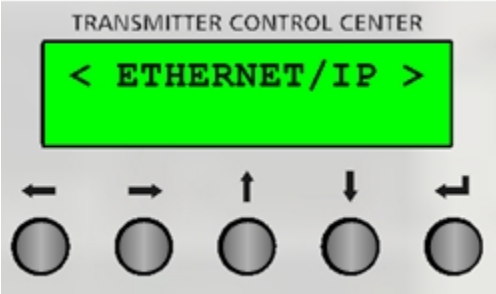

2. Depress ↵.
   The Ethernet/IP setup menu will appear.

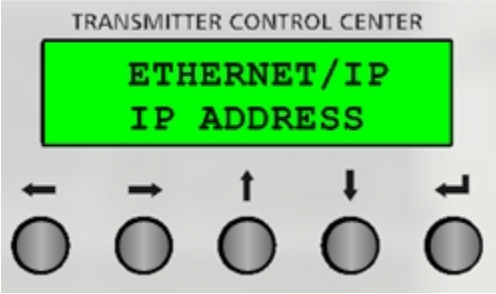

3. Depress ↵.
   The I.P. Address menu will appear.

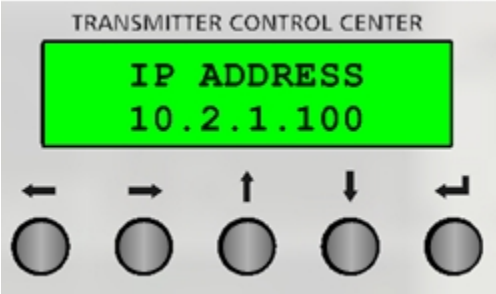

4. Depress ↵.
   The I.P. Address setup menu will appear.

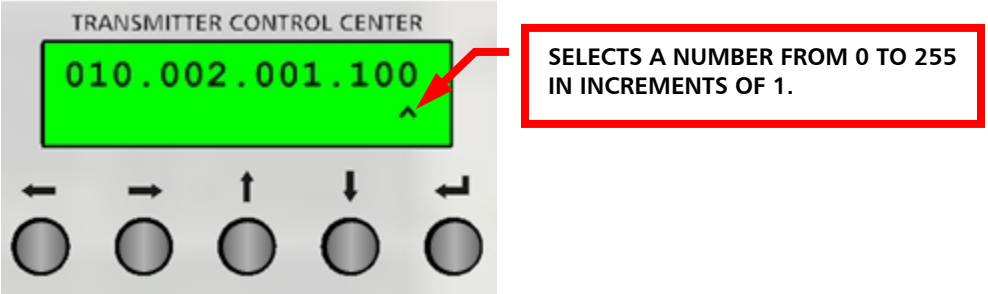

5. Use ↓ ↑ to select a value from 0 to 255 for this field.

©2013 Broadcast Electronics

6. Depress ← .
   The cursor moves to the next field to the left.

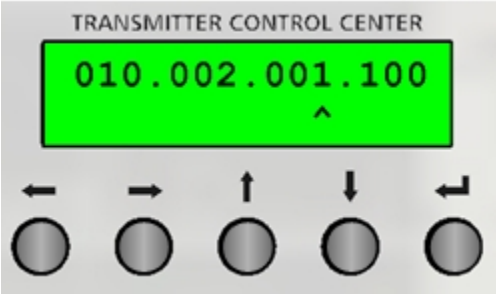

7. Use ↓ ↑ to select a value from 0 to 255 for this field.
8. Depress ← .
   The cursor moves to the next field to the left.

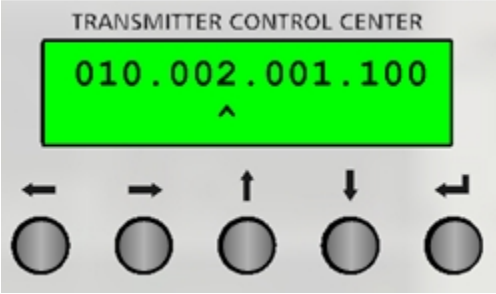

9. Use ↓ ↑ to select a value from 0 to 255 for this field.
10. Depress ← .
    The cursor moves to the next field to the left.

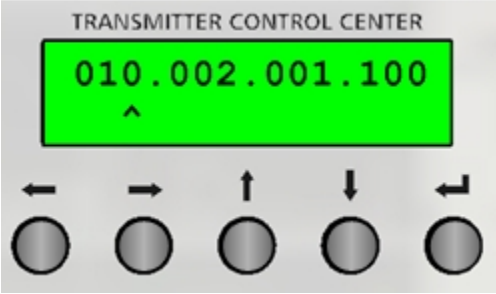

11. Use ↓ ↑ to select a value from 1 to 233 for this field.
12. Depress ↵.
    The I.P. address will be saved.
13. Depress ↵.
    The Ethernet/IP menu will appear.

©2013 Broadcast Electronics

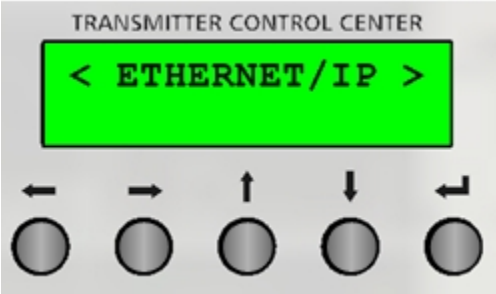

14. Depress ← .
15. Use ↓ ↑ to select Subnet Address.
    The Ethernet/IP Subnet Address menu will appear.

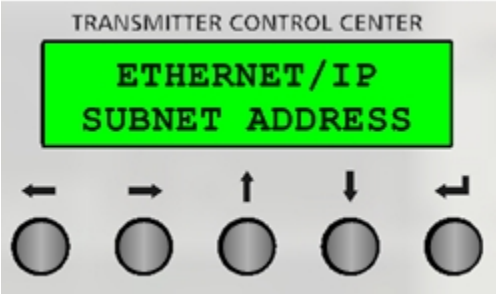

16. Depress ↵.
    The Subnet Address setup menu will appear.

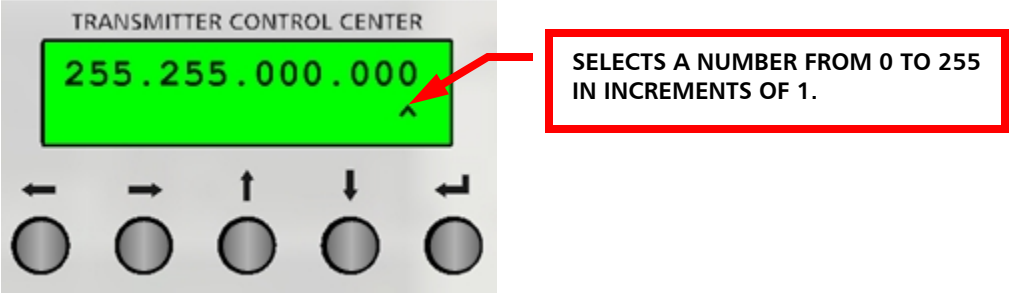

17. Refer to the I.P. Address steps above and enter a subnet mask. The subnet mask using the exact same procedure as the I.P. address with one exception. The first field may be assigned a number from 0 to 255.
18. When finished, depress ↵.
    The subnet mask will be saved.
19. Depress ↵.
    The Ethernet/IP menu will appear.

©2013 Broadcast Electronics

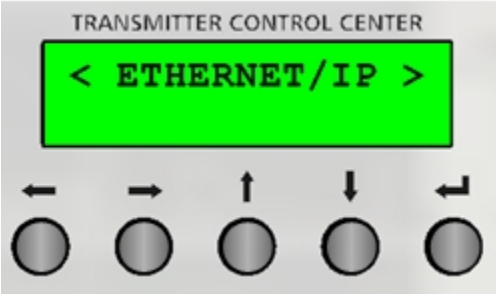

20. Depress ↵.
21. Use ↓ ↑ to select Gateway.
    The Ethernet/IP Gateway menu will appear.

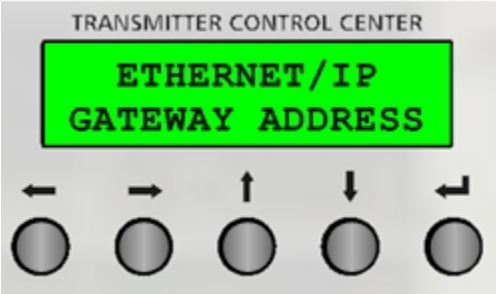

22. Depress ↵.
    The gateway setup menu will appear.

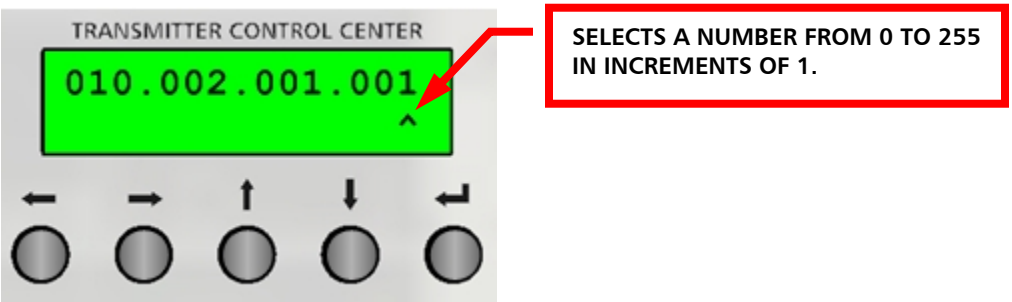

23. Refer to the I.P. Address steps above and enter a gateway. The gateway is entered using the exact same procedure as the I.P. address with one exception. The first field may be assigned a number from 0 to 255.
24. When finished, depress ↵.
    The gateway will be saved.
25. Depress ↵.
    The Ethernet/IP menu will appear.
26. To view the MAC address, use ↓ ↑ to select MAC Address.
    The MAC address menu will appear.

©2013 Broadcast Electronics

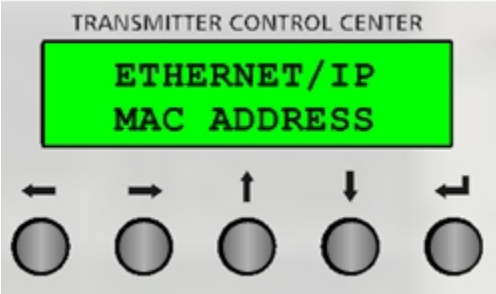

27. Depress ↵.
    The MAC address will appear.

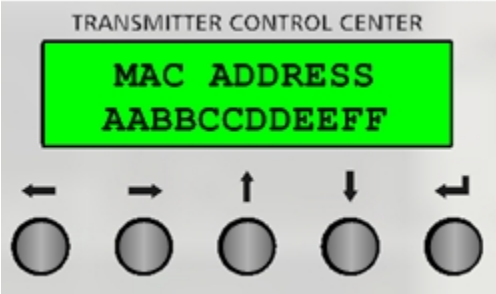

28. Depress ↵.
    The Ethernet/IP menu will appear.

8.15 Metering

The metering/stat menu allows the user to view vital transmitter and PA information such as voltages, currents, and frequencies.

1. Depress ↓ to display the Metering menu.
   The Metering menu will appear.

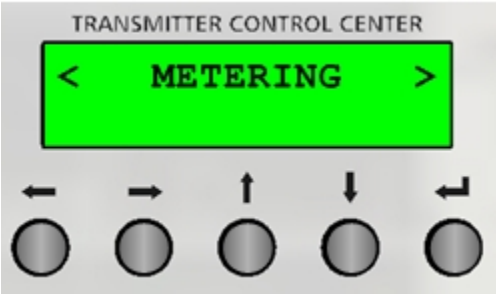

2. Depress ↵.
   The Metering selection menu will appear.

©2013 Broadcast Electronics

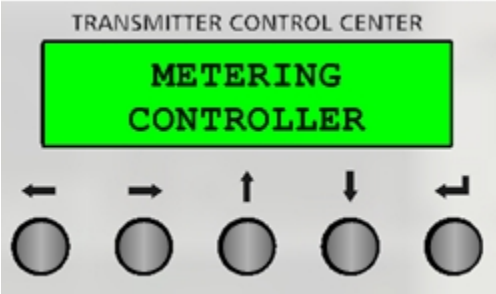

3. The menu allows the selection of either controller, combiner or PA data. Use ↓ ↑ to select CONTROLLER.
4. Depress ↵.
   The controller status menu will appear.

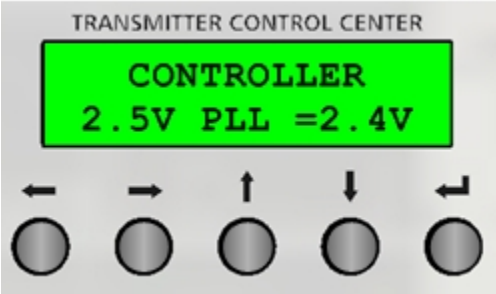

5. Use ↓ ↑ to view the following data:
   - 2.5V Exciter PLL supply
   - 3.3V PA power supply
   - 1.2V Exciter PLL supply
   - 5V power supply
   - 3.3V power supply
   - 1.2V power supply
   - Exciter modulation deviation in kHz.
   - 5V fused
   - LV
   - PA1 bias voltage
6. Depress ↵.
   The transmitter status menu will appear.
7. Depress ↵.
8. *The metering selection menu will appear.*
9. Use ↓ ↑ to select PA1. For STXLP 2 kW, 3 kW, and 5 kW models, additional PAs will be available.
   The PA status menu will appear.

©2013 Broadcast Electronics

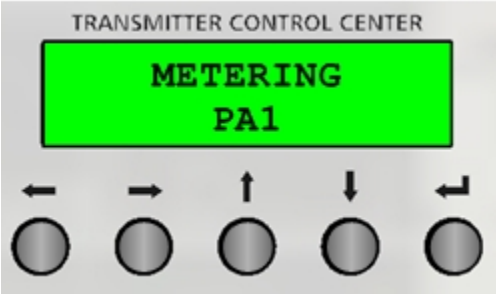

10. Depress ↵.

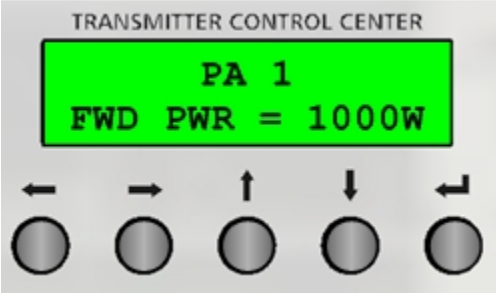

11. Use ↓ ↑ to view the following data:
    - Forward power
    - PA temperature
    - PA 48V supply
    - PA RF input
    - Driver current
    - IPA current
    - Final current 1
    - Final current 2
    - Final current 3
    - Final current 4
    - Reflected power
12. Depress ↵.
13. For 2 kW, 3 kW, and 5 kW models, use ↓ ↑ to select COMBINER.
    The COMBINER status menu will appear.
14. Depress ↵.
15. Use ↓ ↑ to view the following data:
    - RF input
    - Forward power
    - Reflected power
    - +11V supply
    - +5V supply
    - +3.3V supply
    - Configuration
    - Combiner temperature

©2013 Broadcast Electronics

- Inlet temperature
- Fan voltage

16. Depress ↵.
    The Metering/Stat menu will appear.

8.16 Turn On

To turn the transmitter on/off, proceed as follows:

NOTE: **FOR ALL MODELS, ENSURE ALL TRANSMITTER INDIVIDUAL UNIT CIRCUIT BREAKERS AND ON/OFF SWITCHES ARE OPERATED TO ON.**

1. Use ↓ ↑ to select the transmitter ON/OFF menu.
   The ON/OFF menu will appear.

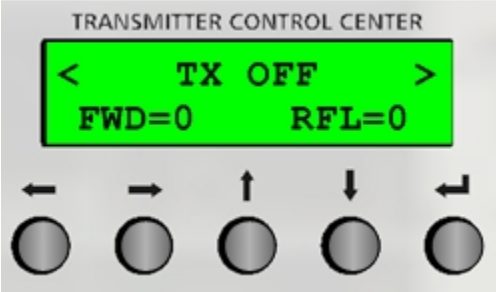

2. Depress ↵.
   The transmitter on/off select menu will appear.

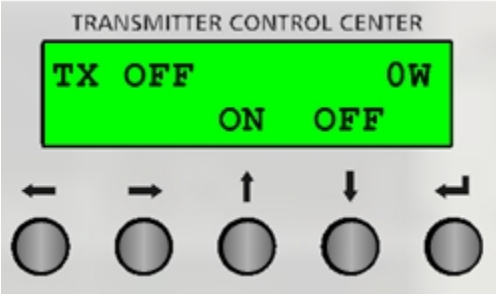

3. To turn the transmitter on, depress ↑ .
   The menu will display the following.

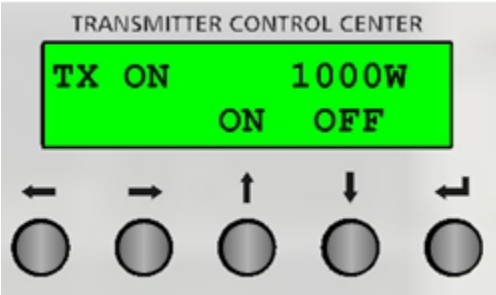

4. To turn the transmitter off, depress ↓ .

The menu will display the following.

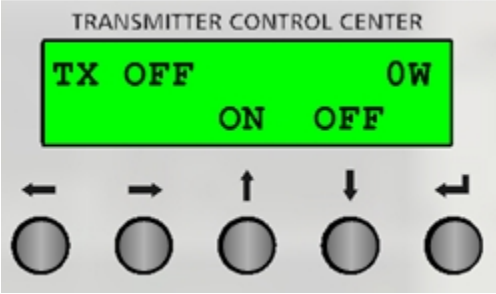

8.17 Standard I.P Control And Optional RGUI System - Password Set

The transmitter is equipped with a standard I.P control interface. The transmitter can also be equipped with the optional RGUI system. Both the I.P control interface and the optional RGUI system are protected by passwords. The passwords include: 1) operator, 2) chief, and 3) RGUI. Both the I.P interface and the optional RGUI system use the chief and operator passwords. Only the optional RGUI system uses the RGUI password to gain view access to the transmitter. The passwords must be 6 digits in length. To set the passwords, proceed as follows:

1. Depress ↓ to display the Password menu.
   The Password menu will appear.

2. With the cursor in this position, use ↓ ↑ to select CHIEF.
   The CHIEF password menu will appear.

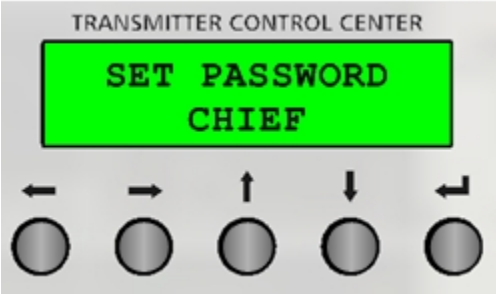

3. Depress ↵.
   The Password edit menu will appear.

©2013 Broadcast Electronics

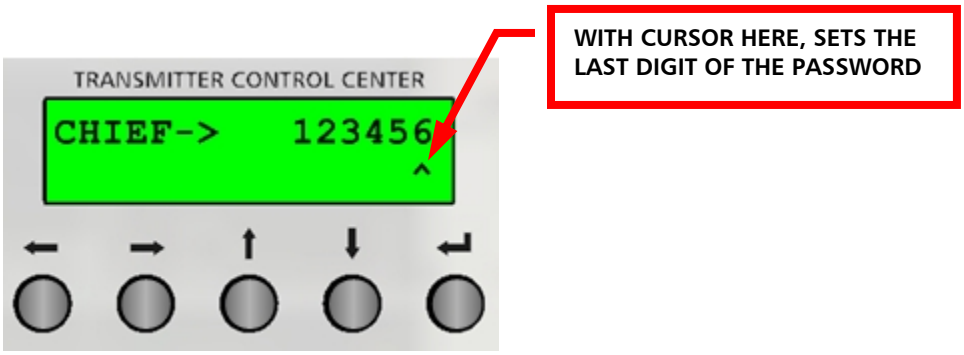

4. With the cursor in this position, use ↓ ↑ to set the last digit of the password.
5. Depress ← .
   The cursor moves to the left.

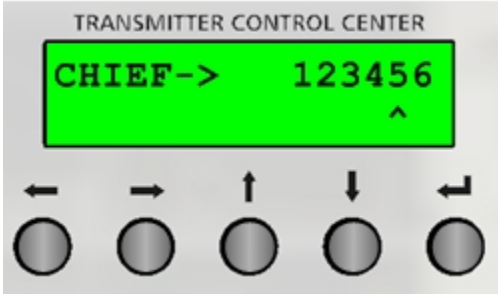

6. With the cursor in this position, use ↓ ↑ to set this password digit.
7. Depress ← .
   The cursor moves to the left.

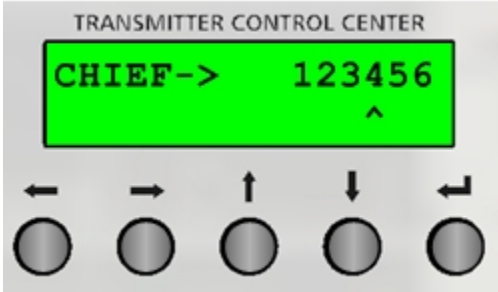

8. With the cursor in this position, use ↓ ↑ to set this password digit.
9. Depress ← .
   The cursor moves to the left.

©2013 Broadcast Electronics

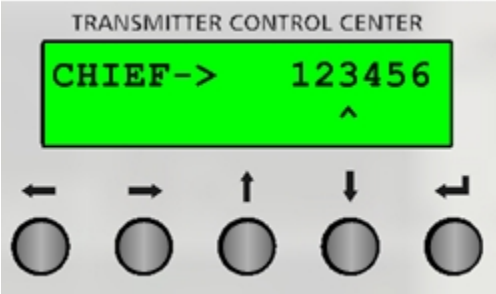

10. With the cursor in this position, use ↓ ↑ to set this password digit.
11. Depress ← .
    The cursor moves to the left.

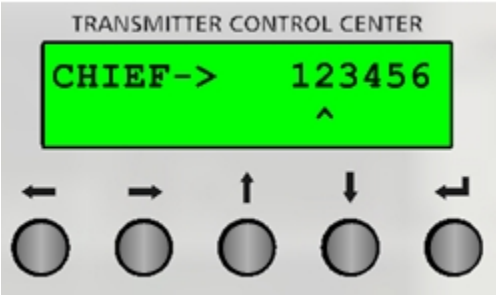

12. With the cursor in this position, use ↓ ↑ to set this password digit.
13. Depress ← .
    The cursor moves to the left.

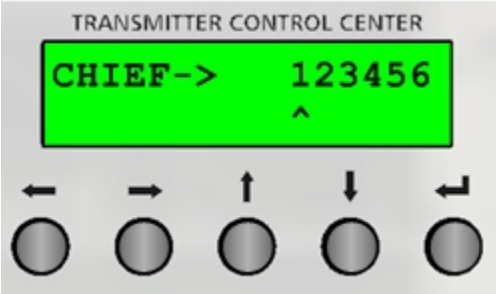

14. Depress ↵.
    The chief password will be saved.
15. Use ↓ ↑ to select Operator.

©2013 Broadcast Electronics

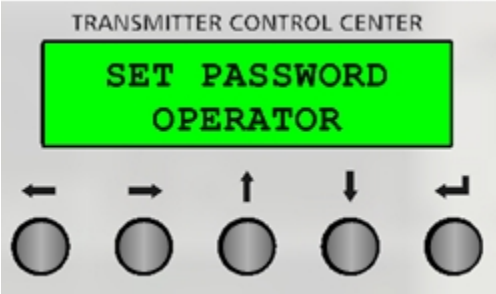

16. Depress ↵.
    The Operator setup menu will appear.

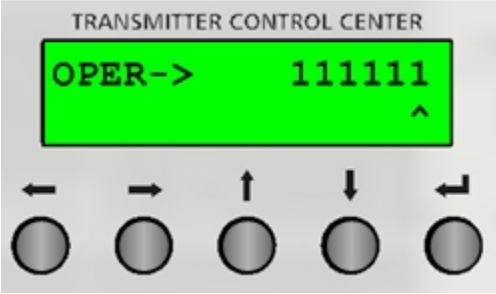

17. Refer to the Chief steps above and enter an operator password The operator password is set using the exact same procedure as the Chief.
18. Depress ↵.
    The operator password will be saved.
19. Use ↓ ↑ to select RGUI.
    The RGUI menu will appear.

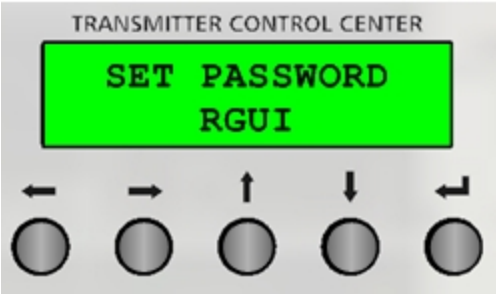

20. Depress ↵.
    The RGUI setup menu will appear.

©2013 Broadcast Electronics

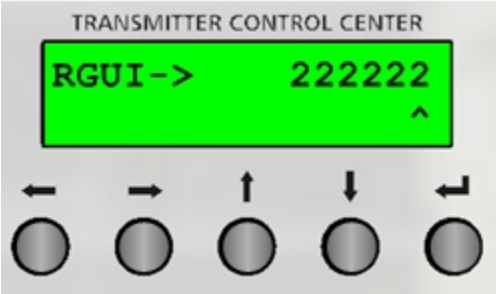

21. Refer to the Chief steps above and enter an RGUI password. The RGUI password is set using the exact same procedure as the chief.
22. Depress ↵.
    The RGUI password will be saved.

8.18 Set the Clock

The clock menu allows the user to set the internal clock. The clock is used only for a future feature. Do not use the clock at this time. The clock time and date are adjusted by: 1) accessing the digit using the →← buttons and 2) using the ↓↑ buttons to change the value.

1. Depress ↓ to display the Set Clock menu.
   The Set Clock menu will appear.

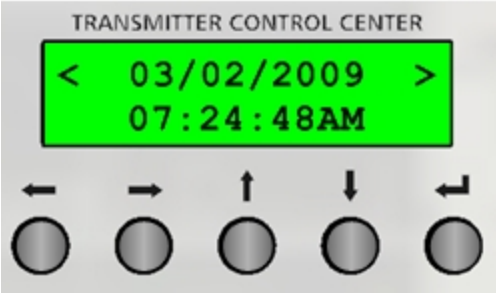

2. Depress ↵.
   The time selection menu will appear.

3. Depress ↓↑ to select TIME.
4. Depress ↵.

©2013 Broadcast Electronics

The set clock time menu will appear.

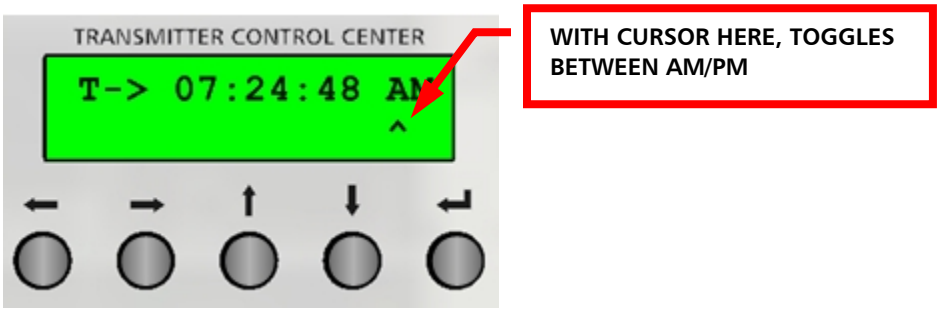

5. With the cursor in this position, use ↓ ↑ to toggle between AM or PM.
6. Depress ← .
   The cursor moves to the left.

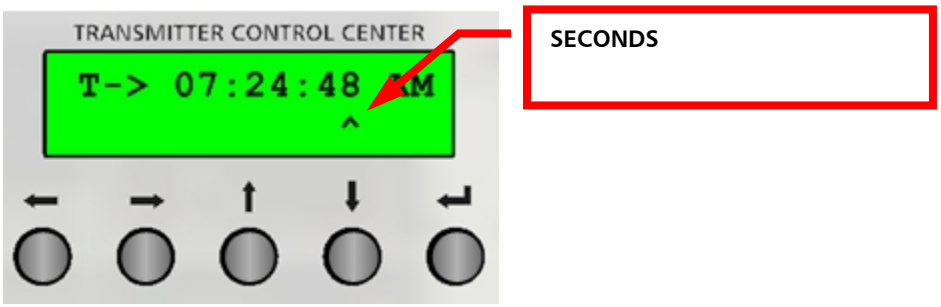

7. With the cursor in this position, use ↓ ↑ to set the seconds.
8. Depress ← .
   The cursor moves to the left.

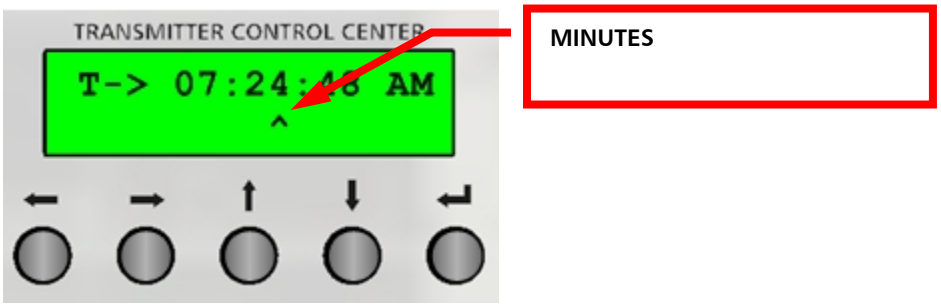

9. With the cursor in this position, use ↓ ↑ to set the minutes.
10. Depress ← .
    The cursor moves to the left.

©2013 Broadcast Electronics

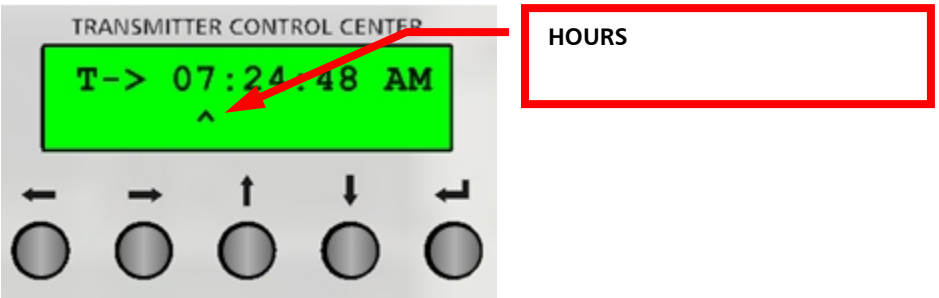

11. With the cursor in this position, use ↓ ↑ to set the hours.
12. Depress ↵.
    The time will be saved.
13. Depress ↵.
    The time select menu will appear.
14. Use ↓ ↑ to select Date.
    The set date menu will appear.

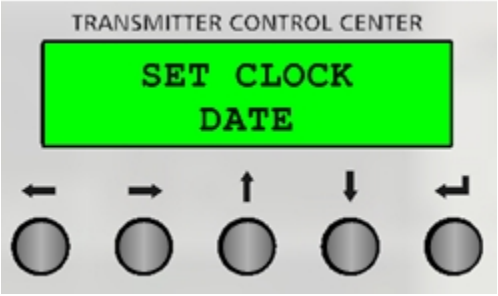

15. Depress ↵.
    The set date menu will appear.

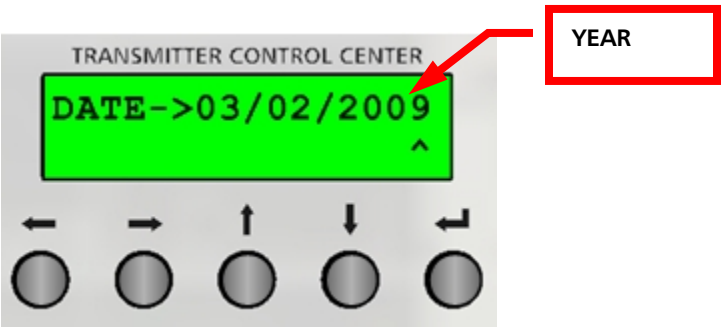

16. With the cursor in this position, use ↓ ↑ to set the year.
17. Depress ← .
    The cursor moves to the left.

©2013 Broadcast Electronics

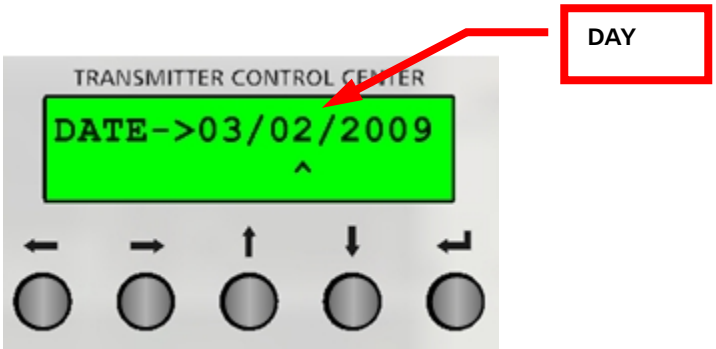

18. With the cursor in this position, use ↓ ↑ to set the day.
19. Depress ← .
    The cursor moves to the left.

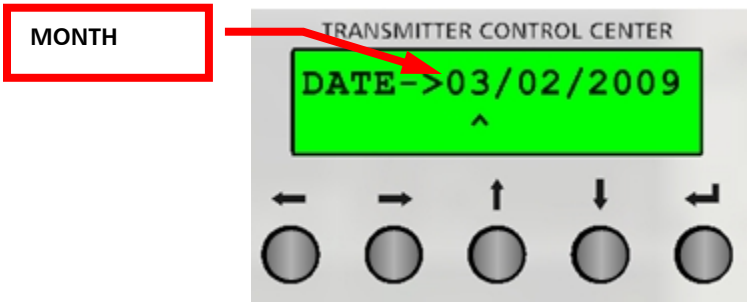

20. With the cursor in this position, use ↓ ↑ to set the month.
21. Depress ↵.
    The date will be saved.

8.19 HD Operation With FXI 60/250 Exciter

The STX can operate with an FXI-60/250 exciter in an HD transmission system. The FXI exciter can operate in the following modes: 1) FM Only, 2) FM+HD, and 3) HD Only. Operating in a specific mode and switching between modes must be performed in a specific manner to prevent damage to the equipment. The system is configured and calibrated at the factory specifically for the type of HD operation requested in the order.

FXI Setup For The STX

On the FXI exciter, access the PA/POWER menu. Ensure FMi 31 to 402 is selected for transmitter type.

FM Only Operation.

⚠ **CAUTION: TO PREVENT DAMAGE TO THE TRANSMITTER, ENSURE THE FXI EXCITER AND THE STX TRANSMITTER ARE CONFIGURED FOR THE SAME MODE OF OPERATION (EXAMPLE – FM ONLY).**

1. Operate the transmitter to Off using the ON/OFF Menu.

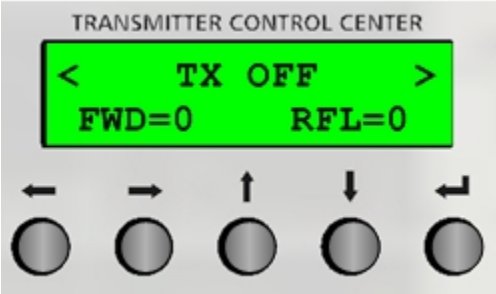

2. On the FXI exciter, access OPER MODE → **IBOC MENU and s**elect FM ONLY.
3. On the STX transmitter, set the exciter modes as follows:
   A. Use ↓ ↑ to access the SETUP menu.
   B. Depress ↵.
   C. Use ↓ ↑ to access the Internal/External exciter menu.
   D. Depress ↵.
   E. Use ↓ ↑ to select EXTERNAL.
   F. Depress ↵.
   G. Depress ↵again to re-enter the setup menu.
   H. Use ↓ ↑ to access the External Exciter Mode menu.

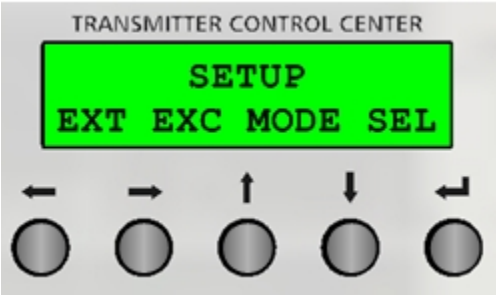

   I. Depress ↵.
   The External Exciter Mode Select menu will appear.

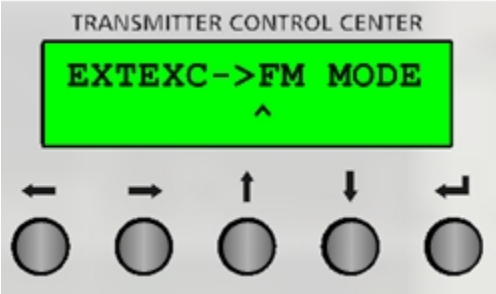

   J. Use ↓ ↑ to select FM MODE. Ensure the transmitter is configured for the same mode of operation as the exciter.

©2013 Broadcast Electronics

K. Depress ↵.
The mode will be saved.

L. Operate the transmitter to On using the ON/OFF Menu.

FM+HD Operation.

CAUTION: TO PREVENT DAMAGE TO THE TRANSMITTER, ENSURE THE FXI EXCITER AND THE STX TRANSMITTER ARE CONFIGURED FOR THE SAME MODE OF OPERATION (EXAMPLE – FM ONLY).

Repeat the FM Only Operation procedure above for FM+HD operation. Select the FM&IBOC mode for the FXI exciter and HYB MODE on the STX transmitter. Ensure the transmitter is configured for the same mode of operation as the exciter.

HD Only Operation.

CAUTION: TO PREVENT DAMAGE TO THE TRANSMITTER, ENSURE THE FXI EXCITER AND THE STX TRANSMITTER ARE CONFIGURED FOR THE SAME MODE OF OPERATION (EXAMPLE – FM ONLY).

Repeat the FM Only Operation procedure above for HD Only operation. Select the IBOC ONLY mode for the FXI exciter and HD MODE on the STX transmitter. Ensure the transmitter is configured for the same mode of operation as the exciter.

©2013 Broadcast Electronics

9 I.P. Control

NOTE: TO ENSURE OPERATIONAL INTEGRITY OF THE STX LP TRANSMITTER WHILE USING IP CONTROL, IT IS STRONGLY RECOMMENDED THAT THE UNIT BE INSTALLED ON A PRIVATE NETWORK, BEHIND A FIREWALL, WITH SECURED VIRTUAL PRIVATE NETWORK (VPN) ACCESS.

The STXLP transmitter is equipped with a standard I.P. control interface (refer to Figure 9-1 – RGUI compatible release shown). This interface allows the transmitter to be controlled using a PC and a standard web browser. The transmitter can also be equipped with the optional STXLP RGUI option. When compared to the standard I.P. interface, the RGUI option provides the user with many additional features.

The web interface requires a Windows computer. The following text presents the computer requirements. If I.P. control is to be used, it is strongly recommended the control system be implemented using a VPN and behind a firewall.

- Windows XP – Reasonable processor speed.
- Windows Internet Explorer 7 or newer.
- High speed I.P. connection.

9.1 Standard I.P. Interface

The standard STXLP transmitter I.P. interface is shown in Figure 9-1. The following text presents the procedure to use the standard I.P. control with Microsoft Internet Explorer. If a delay in loading the page is observed, select the browser refresh button. To use the standard interface, proceed as follows:

9.2 Maximum Number And Type Of RGUI/Web Users

The transmitter can support up to a maximum of 3 simultaneous RGUI/Web users. The optional RGUI users have precedence. Therefore, if 2 RGUI users and one web user are connected and another RGUI user logs in, the web user session will be terminated.

©2013 Broadcast Electronics

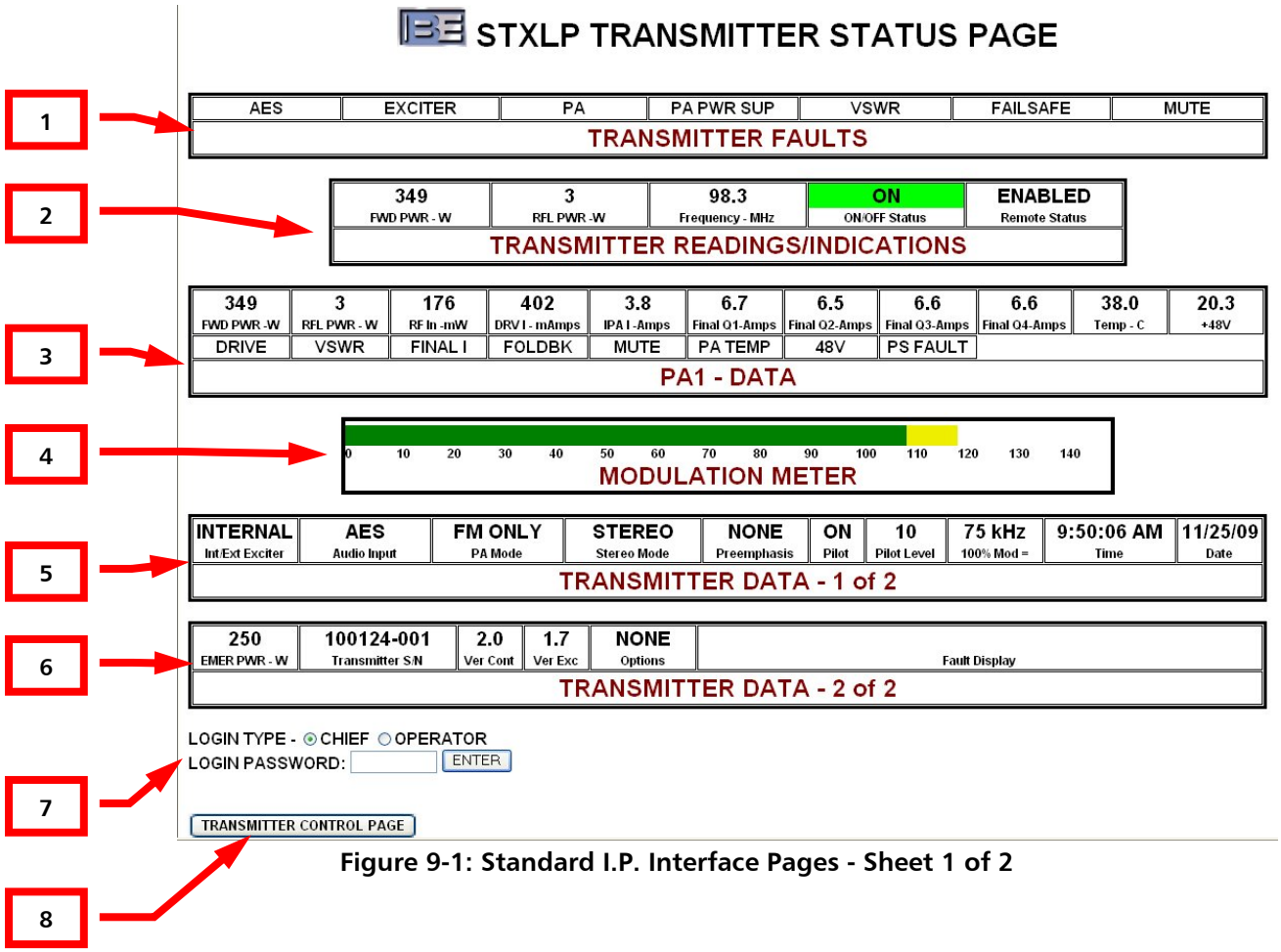

Figure 9-1: Standard I.P. Interface Pages - Sheet 1 of 2

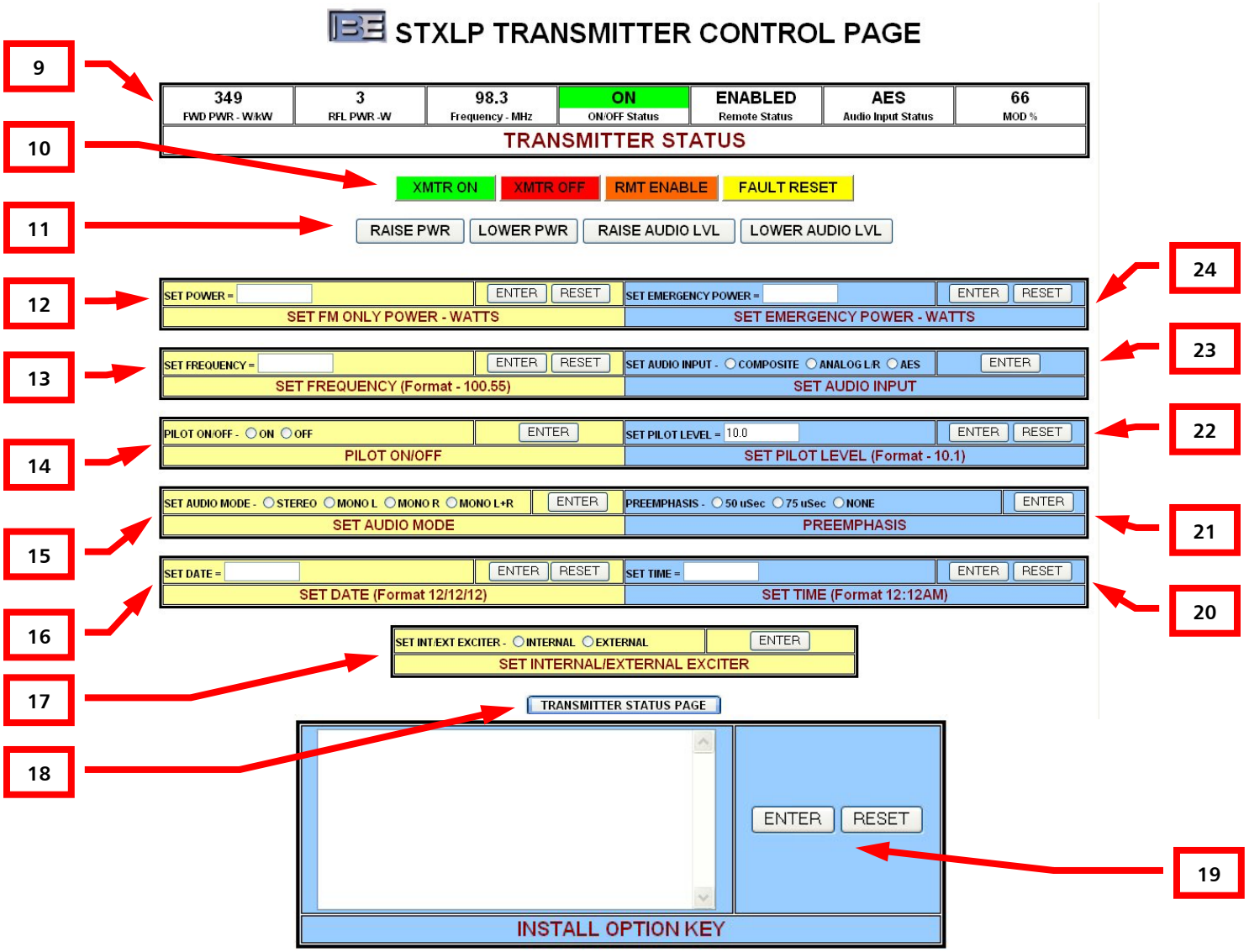

Figure 9-2: Standard I.P. Interface Pages - Sheet 2 of 2

Table 9-1: Standard I.P. Interface Features

No.	Feature	Description
1	Transmitter Faults	Displays the status of the transmitter faults. The faults include: 1) audio, 2) exciter, 3) controller, 4) PA, 5) PA power supply, 6) VSWR, 7) Failsafe, and 8) mute.
2	Transmitter Readings/ Indications	Displays the transmitter: 1) forward power, 2) reflected power, 3) frequency, 4) on/off status, and 5) remote enable status.
3	PA1 – Data and Faults	Displays the PA data: 1) forward power, 2) reflected power, 3) RF input, 4) IPA current, 5) final transistor 1 thru 4 current, 6) temperature, and 7) power supply voltage. Additional PA's are displayed for 2 kW, 3 kW, and 5 kW models.
4	Modulation Meter	Displays the transmitter modulation.
5	Transmitter Data 1 of 2	This table displays the status of: 1) exciter – internal/external, 2) audio input – composite/AES/Analog L/R, 3) PA mode – FM Only/FM+HD/HD Only, 4) stereo mode – stereo/mono L/mono R/mono L+R, 5) preemphasis – 50 uS/75 us/None, 6) pilot – on/off, 7) pilot level, 8) time and 9) date.
6	Transmitter Data 2 of 2	This table displays the status of: 1) emergency power setting, 2) transmitter serial number, 3) controller software version, 4) exciter software version, and 5) fault display.
7	Login Password	Allows the user to enter a password to access the transmitter control page. Password is 6 digits.
8	Transmitter Control Page Link	Link to the transmitter control page. This is active only when the user is logged in with the correct password.
9	Transmitter Status	Displays the status of essential transmitter operating parameters on the control page. The parameters include: 1) forward power, 2) reflected power, 3) frequency, 4) on/off status, 5) remote enabled/disabled status, and 6) modulation level.
10	Control Buttons 1 of 2	Control buttons – 1) transmitter on, 2) transmitter off, 3) remote enable/disable, and 4) fault reset.
11	Control Buttons 2 of 2	Control buttons – 1) raise power, 2) lower power, 3) raise audio level, and 4) lower audio level.
12	Set Power	Allows the user to enter a value to set the transmitter output power level in watts. The power level range is determined by the PA operating mode.
13	Set Frequency	Allows the user to enter the transmitter frequency. The frequency is entered in 10 kHz increments using the following format: Example – 88.5, 92.55
14	Pilot On/Off	Allows the user to enable/disable the pilot. Optional stereo generator circuit board required.
15	Set Audio Input	Allows the user to set the audio input. Optional stereo generator circuit board required.
16	Set Date	Allows the user to enter the date in the following format – 12/12/12.
17	Set Internal/External Exciter	Allows the user to select the internal or an external exciter.
17	Set Date	Allows the user to enter the date in the following format – 12/12/12.
18	Transmitter Status Page Link	Link to the transmitter status page.

©2013 Broadcast Electronics

19	Install Option Key	Allows the user to send an option key to the transmitter.
20	Set Time	Allows the user to enter the time in the following format – 12:12 AM.
21	Set Preemphasis	Allows the user to set the preemphasis. Optional stereo generator circuit board required.
22	Set Pilot Level	Allows the user to set the pilot level using the following format – 10.1. Optional stereo generator circuit board required.
23	Set Audio Mode	Allows the user to select the audio mode: 1) stereo, 2) mono L, 3) mono R, or 4) mono L+R. Optional stereo generator circuit board required.
24	Set Emergency Power	Allows the user to set the emergency power level.

1. For normal network/I.P. connections, ensure a normal Ethernet patch cable is connected between the transmitter ETHERNET connector and the network. If a PC is to be directly connected to the transmitter, connect an Ethernet crossover cable between the PC Ethernet port and the transmitter ETHERNET connector. For direct PC connections, the PC must be configured for the I.P. family of the transmitter. Ensure the PC is configured for the transmitter I.P. family.

   NOTE: TO ENSURE OPERATIONAL INTEGRITY OF THE STX LP TRANSMITTER WHILE USING IP CONTROL, IT IS STRONGLY RECOMMENDED THAT THE UNIT BE INSTALLED ON A PRIVATE NETWORK, BEHIND A FIREWALL, WITH SECURED VIRTUAL PRIVATE NETWORK (VPN) ACCESS.

2. The transmitter must be assigned the desired I.P. address, subnet mask, and gateway. If required, refer to Section 8 and ensure the desired I.P. address, subnet mask, and gateway are assigned to the transmitter.
3. On the PC, start Internet Explorer.
4. Refer to Figure 9-3 and enter the transmitter I.P. address as shown.
5. Depress Enter.
   *The standard web interface page will ap*pear. Figure 9-1 and Table 9-1 *presents the standard web interface features.*
6. If the status page does not appear, use the Ping command to check and troubleshoot the connection.
7. The control page can be used to view and control transmitter parameters in a manner similar to the front panel. Refer to Figure 9-1 and Table 9-1 to operate the transmitter.
8. To access the control page as Chief, proceed as follows:
   A. On the status page, select CHIEF.
   B. Use the keyboard to enter the Chief password.
   C. Select ENTER.
      If the password is valid, the standard web interface control page will appear.
   D. Repeat the procedure for the operator using the operator password.

©2013 Broadcast Electronics

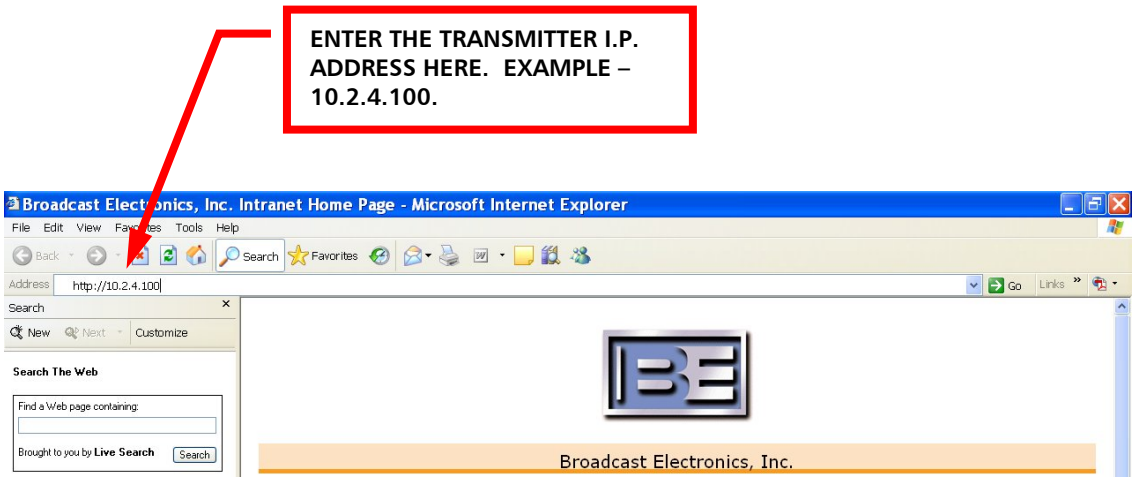

Figure 9-3: Internet Explorer

9.3 Optional STXLP RGUI I.P. Control

The transmitter can also be equipped with the optional STXLP RGUI option. When compared to the standard I.P. interface, the RGUI option provides the user with many additional features. Refer to the STXLP RGUI option manual for installation and operating information.

10 Maintenance

10.1 Diagnostics

If a fault occurs, information on the fault can be obtained by selecting the <DIAGNOSTICS> →CONTROLLER menu. If the fault is located in the PA, the information can be located by selecting the <DIAGNOSTICS> → PA menu. For 2 kW, 3 kW, and 5 kW models, a fault can be located in the combiner by selecting the <DIAGNOSTICS> → COMBINER menu. A fault can be reset by selecting the <DIAGNOSTICS>→ FAULT RESET→ FAULT RESET YES/NO menu. The following text presents the transmitter and PA diagnostic information.

Table 10-1: Troubleshooting table

TRANSMITTER	
FAULT	**TROUBLESHOOTING TASKS**
Failsafe - Open	The transmitter failsafe is open. Check the equipment external to the system.
PLL Fault	The internal exciter VCO is unlocked. Check the power supply voltages on the exciter. Check the cables between the controller and the exciter.
VSWR Shutdown	The transmitter has detected a VSWR condition of greater than 2.0:1. Check the antenna. If the antenna is ok, check the RF output connector and low-pass filter assembly.

©2013 Broadcast Electronics

Controller Fault	This indicates a fault has occurred in the main controller. As a result, control of the system has been switched to the backup controller (see Emergency Control – Backup Controller in the following text). When this occurs, the transmitter: • The controller LED will flash red. • Depending on the failure, the LCD display will be blank or frozen. • The transmitter will operate at the power level entered in the <SETUP> → EMERGENCY PWR menu. Ignore all other front panel indicators. The indicators may not provide accurate information.
Exciter Fault	A fault has been detected in the transmitter exciter. Ensure DS1 through DS6 LEDs are illuminated green. Ensure the cables connected to J2 and J7 are secure.
PA MODULE	
FAULT	**TROUBLESHOOTING TASKS**
VSWR Shutdown	The PA module is in VSWR shutdown. Check the antenna. In 2 kW, 3 kW, and 5 kW models, check the combiner. Check the low-pass filter.
VSWR Foldback	The PA module is in VSWR foldback. Check the antenna. In 2 kW, 3 kW, and 5 kW models , check the combiner. Check the low-pass filter.
RF Input	The PA RF input is low or missing. If the internal exciter is selected, check: 1) the cable between the EXEC RF OUT and the PA RF IN connectors 2) check the exciter. If the external exciter is selected, check the external exciter.
Power Supply	A fault has been detected in the PA power supply. Check the PA power supply for an over-voltage, current foldback, or over-temperature condition.
Current Foldback	The PA is in current foldback. Check the low-pass filter. In 2 kW, 3 kW, and 5 kW models, check the combiner.
Temperature Fault	The PA is in temperature fault. Check the fan.
Temperature Foldback	The PA is in temperature foldback. Check the fan.
COMBINER	
FAULT	**TROUBLESHOOTING TASKS**
RF IN Fault	The combiner splitter RF input level is below 2.5 mW. Check the exciter RF output level and cabling between the exciter and the combiner. Ensure the BE splitter cables are used.
Input Overdrive Fault	The combiner splitter RF input level is above 250 mW. Check the exciter RF output level and cabling between the exciter and the combiner.
Over temperature Fault	The combiner temperature is above 118 C. The combiner fan has two speeds: 1) high and 2) low. Check the fan and the fan speed.
VSWR Fault	A VSWR condition of greater than 1.5:1 is present at the combiner RF output. Check the antenna and the combiner.
Splitter Muted	The combiner splitter is muted. This can be caused by: 1) an RF input overdrive condition or 2) a temperature above 118 C. Check the RF input and the combiner temperature.

©2013 Broadcast Electronics

10.2 Software Update – Controller/Exciter

The transmitter controller and exciter contain software which can be changed using the STXLP software update application. The software update can be performed: 1) locally at the transmitter with a direct connection between a PC and the transmitter or 2) remotely using I.P to access the transmitter subnet.

The software update program requires a Windows computer. The following text presents the computer requirements -

- Windows XP – 500 MHz or greater.
- High speed wired I.P. connection.

Terminate all other running programs during the download. It is recommended the computer be on the same local network as the transmitter. Once the software is downloaded to the transmitter, the controller must be reset or the AC power cycled (off then on) to load the new version. To update the controller/exciter software, proceed as follows:

NOTE: IT IS RECOMMENDED THE COMPUTER BE ON THE SAME LOCAL NETWORK AS THE TRANSMITTER.

NOTE: DO NOT CYCLE THE AC POWER DURING THE UPDATE PROCESS. ENSURE THE CODE HAS BEEN INSTALLED BEFORE AC POWER IS CYCLED.

1. Connect the transmitter to the PC or network/I.P. For normal network/I.P. connections, ensure a normal Ethernet patch cable is connected between the transmitter ETHERNET connector and the network. If a PC is to be directly connected to the transmitter, connect an Ethernet crossover cable between the PC Ethernet port and the transmitter ETHERNET connector. For direct PC connections, the PC must be configured for the I.P. family of the transmitter. Ensure the PC is configured for the transmitter I.P. family.
2. Using Windows Explorer, copy all of the software files to a folder on the hard drive "C:\" of the PC. Unzip the files (if they have been zipped) ensuring that all of the files remain in the "STXLP Upgrade" directory.
3. On the PC, terminate all running programs.
4. Terminate all transmitter I.P. users.
5. On the PC, using Windows Explorer, navigate to the directory on the hard drive of the PC where you copied the upgrade files to and double click on the **AutoUpdate.exe** application icon.
   The AutoUpdate program will appear.

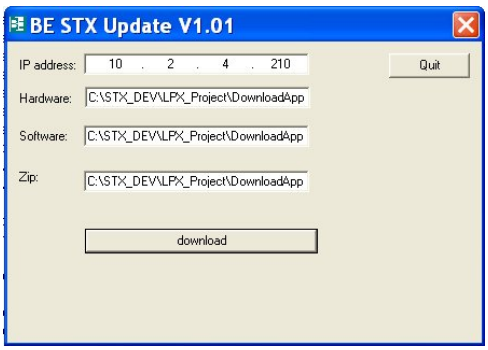

Figure 10-1: STXLP AutoUpdate Program

©2013 Broadcast Electronics

6. Once the **AutoUpdate** application has launched, enter the STXLP Transmitter I.P. Address.

NOTE: DO NOT CYCLE THE AC POWER DURING THE FLASH WRITE PROCESS.

NOTE: IF A PROBLEM OCCURS, SELECT CANCEL TO STOP THE DOWNLOAD.

7. Select DOWNLOAD.
   The status bar presents the progress of the download and flash writing process.
8. When finished, select QUIT.
9. Cycle the AC power (operate to off then on) to activate the code.
10. Refer to Section 8 and check the software version using the DIAGNOSTICS TRANSMITTER menu.
11. If the download fails such as from a lost I.P. connection, repeat the procedure.

10.3 Emergency Control – Backup Controller

If a controller fault occurs, the transmitter will be operating from the backup controller. When this occurs:

- The front panel CNTL LED will flash red.
- Depending on the failure, the LCD display will be blank or frozen.
- The transmitter will operate at the power level entered in the SETUP EMERGENCY PWR menu.
- Ignore all other front panel indicators. The indicators may not provide accurate information.
- The following remote functions will be functional: 1) mute, 2) failsafe, 3) transmitter on, 4) transmitter off, 5) AFC lock status, and 6) fault status.

CAUTION: FOR STXLP-5kW MODELS, IT IS RECOMMENDED THE UNIT OPERATE AT A MAXIMUM OF 3330W IN EMERGENCY POWER MODE TO PREVENT DAMAGE TO THE COMBINER.

For STXLP-1kW, 2kW, and 3kW models, the units can be operated at any emergency power setting. For STXLP-5kW models, it is recommended the unit operate at a maximum of 3330W in emergency power mode to prevent damage to the combiner. This will allow for a simultaneous controller and PA failure. This level can be increased if all PAs are operating normally. The transmitter can be operated in this condition for an extended period of time. However, the unit will be operating with no automatic power control.

Typical causes of a controller failure are: 1) an improper download or 2) problems with the power supplies on the controller pcb assembly. To troubleshoot and repair the controller, the transmitter must be removed from on-air operation. To reprogram the software, refer to Software Update – Controller/Exciter in the preceding text and re-program the transmitter software. To replace the controller circuit board, refer to the Replace The Controller procedure in the following text.

©2013 Broadcast Electronics

10.4 Front Panel and Circuit Board Indicators

Several of the transmitter circuit boards contain LEDs to provide operational status of the circuitry. The following text presents the circuit board indicators:

Table 10-2: Front Panel and Circuit Board Indicators

FRONT PANEL INDICATORS	
STXLP – 1kW UNIT	
INDICATOR	**DESCRIPTION**
AUDIO	The audio indicator illuminates red if no modulation is detected in the selected audio input source for a period of time. The indicator illuminates green during normal operation.
EXCITER	The exciter indicator illuminates red if the internal exciter: 1) AFC (Automatic Frequency Control) becomes unlocked or 2) a communication fault occurs. The indicator illuminates green during normal operation.
PA	For 1 kW models, the PA indicator illuminates red if a fault is detected in the PA module. For 2 kW, 3 kW, and 5 kW models, the PA indicator illuminates red if a fault is detected in any PA module. The indicator illuminates green during normal operation.
VSWR	The VSWR indicator illuminates red when a greater than 1.5:1 VSWR condition is detected. The indicator illuminates green during normal operation.
PS	For 1 kW models, the PS indicator illuminates red if a fault is detected in the PA power supply module. For 2 kW, 3 kW, and 5 kW models, the PS indicator illuminates red if a fault is detected in any PA power supply module. The indicator illuminates green during normal operation.
CNTL	The CNTL indicator flashes red when a fault has been detected in the controller and the unit has switched to the backup controller.
FAILSAFE	The FAILSAFE indicator illuminates red when the failsafe is opened. The indicator illuminates green when the failsafe is closed.
PA ONLY UNIT	
INDICATOR	**DESCRIPTION**
DRV	The drive indicator illuminates red if no RF is present at the input. The indicator illuminates green during normal operation. The indicator is red when the transmitter RF is off.
PA	The PA indicator illuminates red if a fault is detected in the PA module. The indicator illuminates green during normal operation.
VSWR	The VSWR indicator illuminates red when a greater than 1.5:1 VSWR condition is detected. The indicator illuminates green during normal operation.
PS	The PS indicator illuminates red if a fault is detected in the PA power supply module. The indicator illuminates green during normal operation.

©2013 Broadcast Electronics

COMBINER UNIT	
INDICATOR	**DESCRIPTION**
SPLITTER RF IN	The splitter RF in indicator illuminates red if the RF input level is too low or high. The indicator illuminates green during normal operation. The indicator is red when the transmitter RF is off.
COMBINER TEMP	The combiner temp indicator illuminates red if he combiner temperature is above 118 C. The indicator illuminates green during normal operation.
VSWR	The VSWR indicator illuminates red when a greater than 1.5:1 VSWR condition is detected. The indicator illuminates green during normal operation.
PS	The PS indicator illuminates red if a fault is detected in the combiner +12V power supply module. The indicator illuminates green during normal operation.
EXCITER CIRCUIT BOARD	
INDICATOR	**DESCRIPTION**
DS2	Illuminates green to indicate the exciter is AFC (Automatic-Frequency-Control) is locked.
DS3	Illuminates green to indicate the +12V supply is operational.
DS4	Illuminates green to indicate the +6V supply is operational.
DS5	Illuminates green to indicate the +5V supply is operational.
DS6	Illuminates green to indicate the +3.3V supply is operational.
DS8	Illuminates green to indicate the -5V supply is operational.
DS9	Illuminates green to indicate the -12V supply is operational.
CONTROLLER CIRCUIT BOARD	
DS1	Illuminates green to indicate the controller microprocessor has successfully loaded the firmware.
DS2	Flashes green to indicate the controller microprocessor software is operational.
DS3	Flashes blue to indicate the controller microprocessor hardware is operational.
DS4	Illuminates red to indicate the controller circuit board is in reset.
DS5	Illuminates green to indicate debug input activity.
DS6	Illuminates green to indicate debug output activity.
DS7	Illuminates green to indicate the 3.3V supply is operational.
DS8	Illuminates green to indicate the +3.3V PA supply is operational.
DS9	Illuminates green to indicate the +2.5V PLL supply is operational.
DS10	Illuminates green to indicate the +1.2V supply is operational.
DS11	Illuminates green to indicate the +5V supply is operational.
DS12	Illuminates green to indicate the +1.2V PLL supply is operational.

©2013 Broadcast Electronics

PA MODULE	
DS1	Illuminates red to indicate a VSWR foldback is present.
DS2	Illuminates red to indicate a VSWR shutdown is present.
DS6	Illuminates red to indicate an overcurrent foldback is present.
DS7	Illuminates red to indicate the +48V status.
DS10	Illuminates red to indicate the +5V status.
DS12	Illuminates red to indicate RF drive is not present.
DS32	Illuminates red to indicate a mute is present..
OPTIONAL STEREO GENERATOR CIRCUIT BOARD	
DS1	Illuminates to indicate +5V is present.
DS2	Illuminates to indicate +1.8V is present.
DS3	Illuminates to indicate +3.3V is present.
DS5	Illuminates to indicate +12V is present.
DS15	Illuminates to indicate +1.8V is present.
DS6	Illuminates to indicate software is initialized.
DS4	Illuminates to indicate AES cable is in use.

10.5 Power Output with PA Failures

For STXLP – 2 kW, 3 kW, and 5 kW models, the transmitter will attempt to maintain on-air operation during a PA failure. For example, if a 3 kW unit is operating at 3 kW and one PA fails completely, the unit will output a specific output power level. If a 3 kW unit is operating at 1.3 kW, the transmitter will increase the output power in the remaining 2 operating PAs to maintain a 1.3 kW power level. A 5 kW unit will operate in a similar manner with the addition of ambient air de-rating.

The following text presents the typical output power for complete PA failure conditions. If a PA unit fails partially (such as 1, 2, or 3 final transistors), the transmitter output power will be higher than shown.

STXLP 2 kW Models

FAILURE CONDITION – 2 kW Models	RF OUTPUT PWR LEVEL.
Programmed RF Out Between 2 kW and 500W With 1 Failed PA.	500 Watts

STXLP 3 kW Models

FAILURE CONDITION – 3 kW Models	RF OUTPUT PWR LEVEL.
Programmed RF Out Between 3 kW and 1333 W With 1 Failed PA. Programmed RF Out Between App. 1332 kW and 750 W With 1 Failed PA	1333 Watts. Programmed RF Out Pwr.
Programmed RF Out Between 3 kW and 750 W With 2 Failed PAs	333 Watts.

©2013 Broadcast Electronics

STXLP 5 kW Models

FAILURE CONDITION – 5 kW Models	RF OUTPUT PWR LEVEL.
Programmed RF Out Between 5 kW and App. 3200 W With 1 Failed PA at 18C. Programmed RF Out Between App. 3200 W and 1250 W With 1 Failed PA at 18C.	3200 Watts. Programmed RF Out Pwr.
Programmed RF Out Between 5 kW and App. 3150 W With 1 Failed PA at 20C. Programmed RF Out Between App. 3150 W and 1250 W With 1 Failed PA at 20C.	3150 Watts. Programmed RF Out Pwr.
Programmed RF Out Between 5 kW and App. 2800 W With 1 Failed PA at 30C. Programmed RF Out Between App. 2800 W and 1250 W With 1 Failed PA at 30C.	2800 Watts. Programmed RF Out Pwr.
Programmed RF Out Between 5 kW and App. 2500 W With 1 Failed PA at 40C. Programmed RF Out Between App. 2500 W and 1250 W With 1 Failed PA at 40C.	2500 Watts. Programmed RF Out Pwr.
Programmed RF Out Between 5 kW and App. 2133 W With 1 Failed PA at 50C. Programmed RF Out Between App. 2133 W and 1250 W With 1 Failed PA at 50C.	2133 Watts. Programmed RF Out Pwr.
Programmed RF Out Between 5 kW and 1250 W With 2 Failed PAs	1800 Watts.
Programmed RF Out Between 5 kW and 1250 W With 3 Failed PAs	800 Watts.
Programmed RF Out Between 5 kW and 1250 W With 4 Failed PAs	200 Watts.

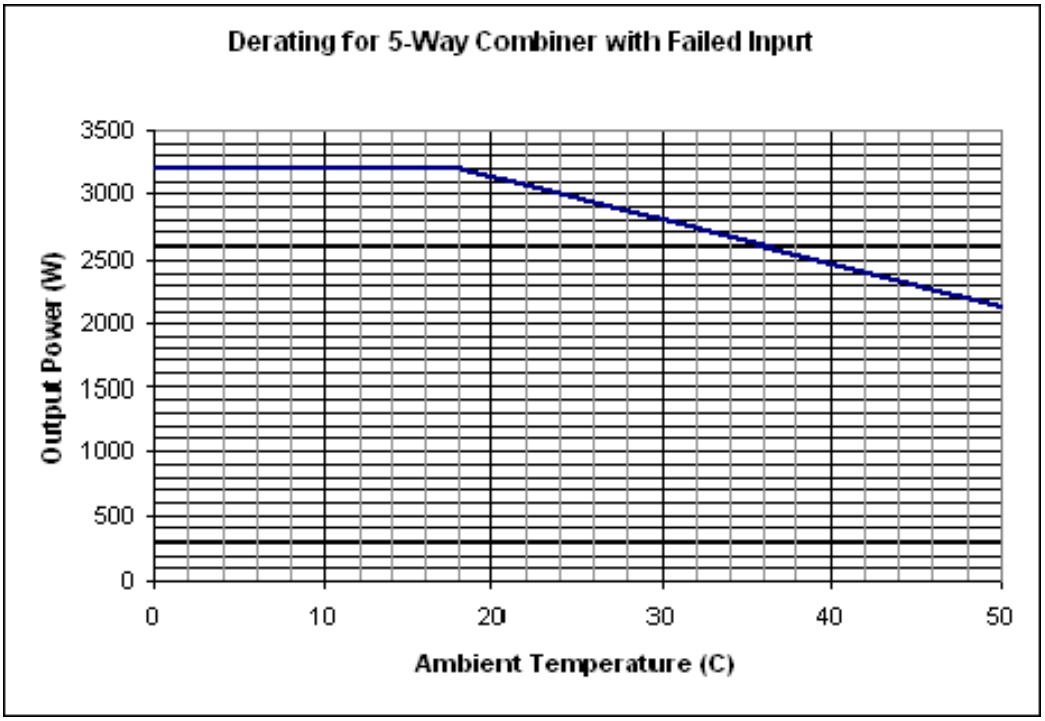

10.6 Troubleshooting Information

WARNING: IF THE PA AND TOP COVERS ARE REMOVED, DO NOT TOUCH ANY COMPONENT ON THE PA ASSEMBLY OR POWER SUPPLY ASSEMBLIES.

Figure 10-2 and Figure 10-3 presents STXLP 1kW model troubleshooting information. If the PA or top covers are removed, do not touch any component on the PA assembly or power supply assemblies.

©2013 Broadcast Electronics

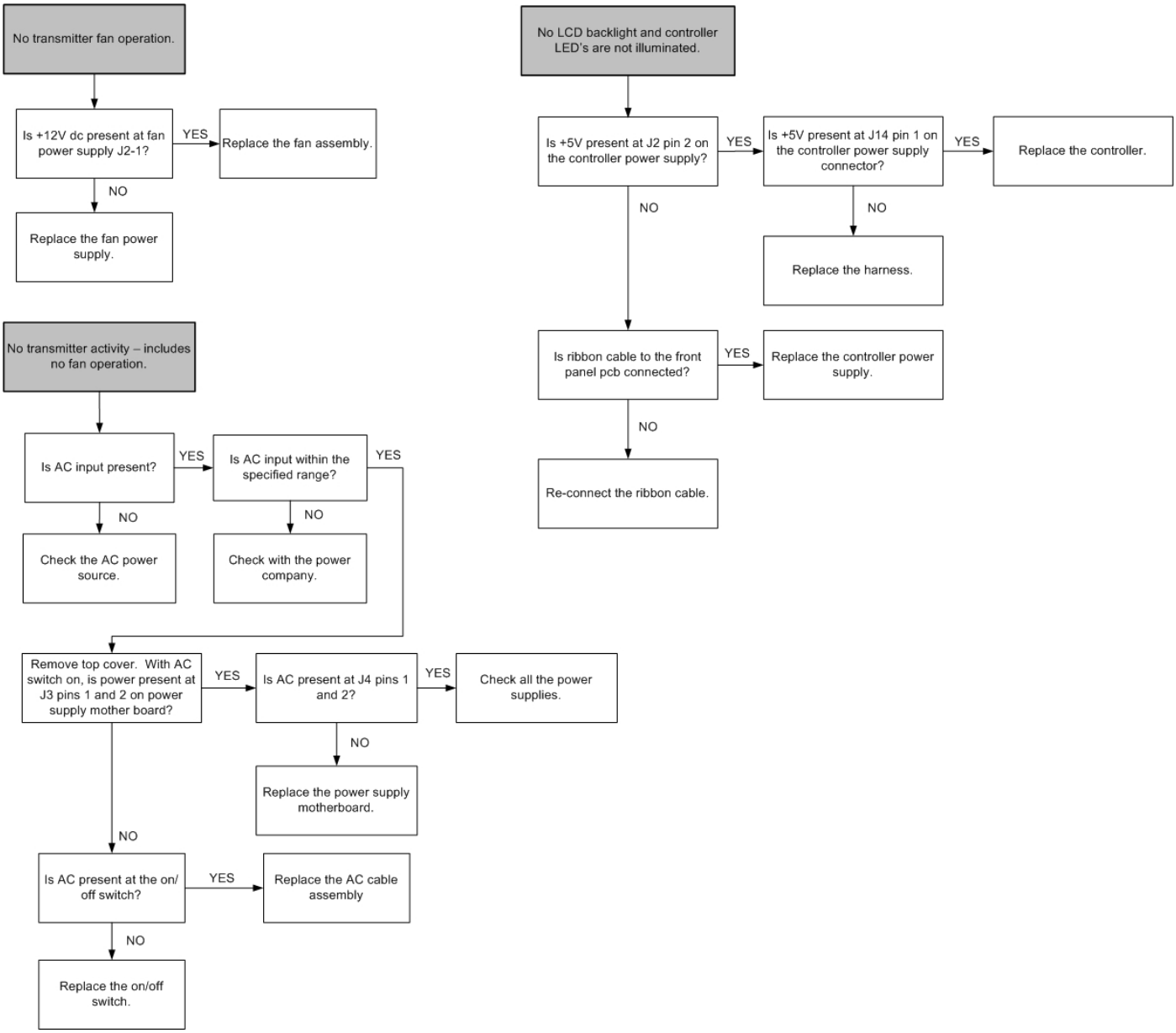

Figure 10-2: STXLP Troubleshooting (Sheet 1 of 5) – 1kW Model

©2013 Broadcast Electronics

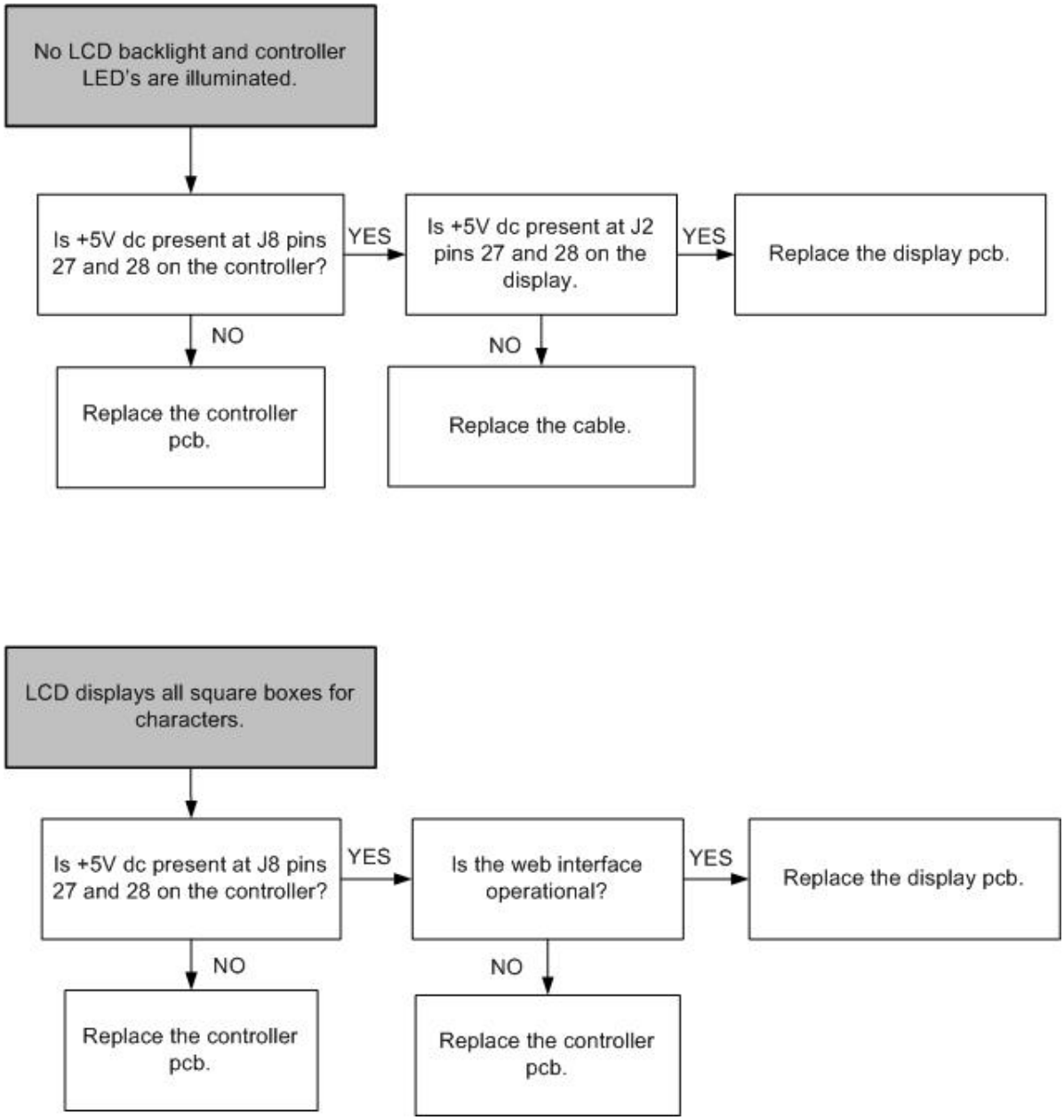

Figure 10-2: STXLP Troubleshooting (Sheet 2 of 5) – 1kW Model

©2013 Broadcast Electronics

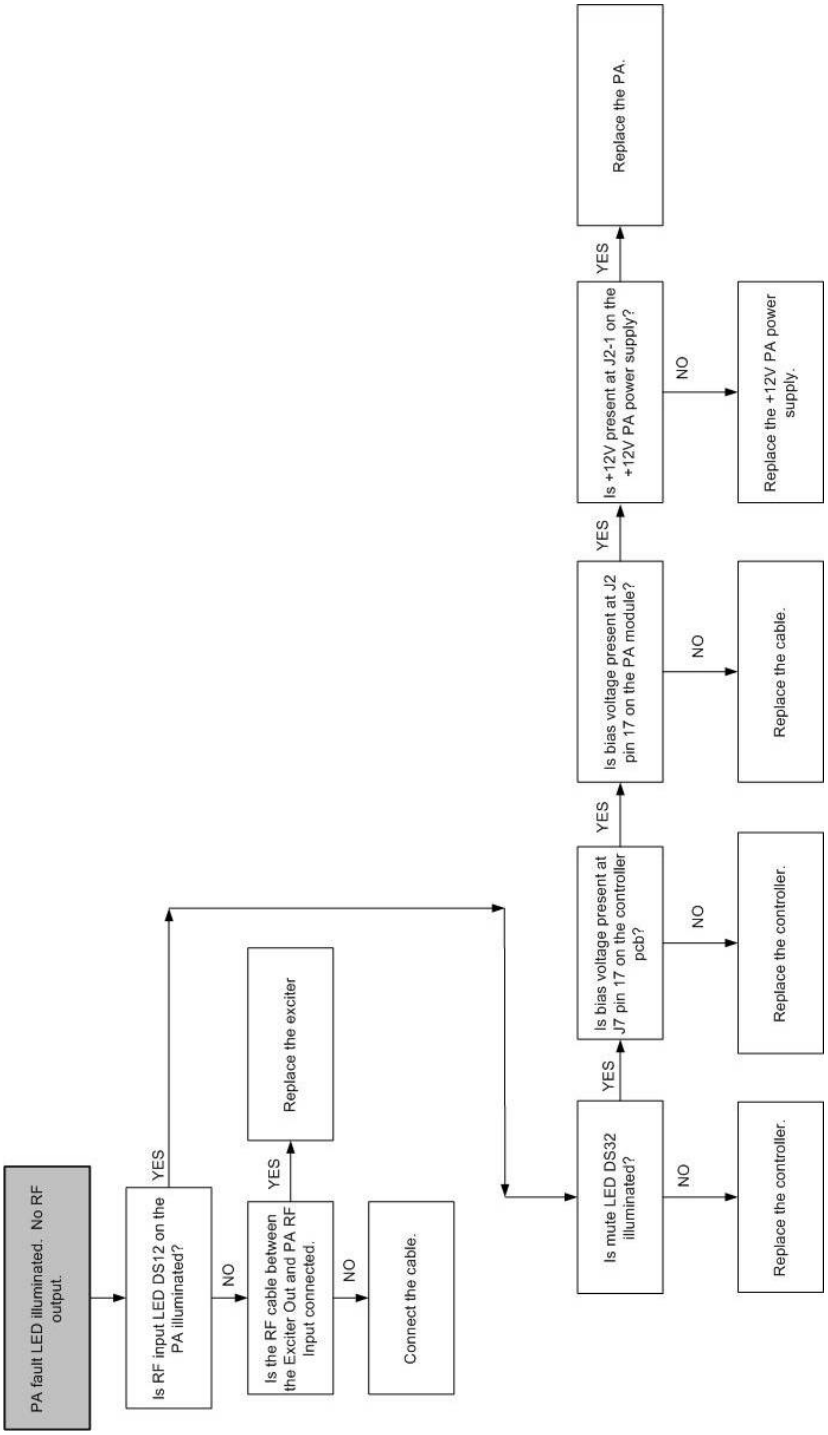

Figure 10-2: STXLP Troubleshooting (Sheet 3 of 5) – 1kW Model

©2013 Broadcast Electronics

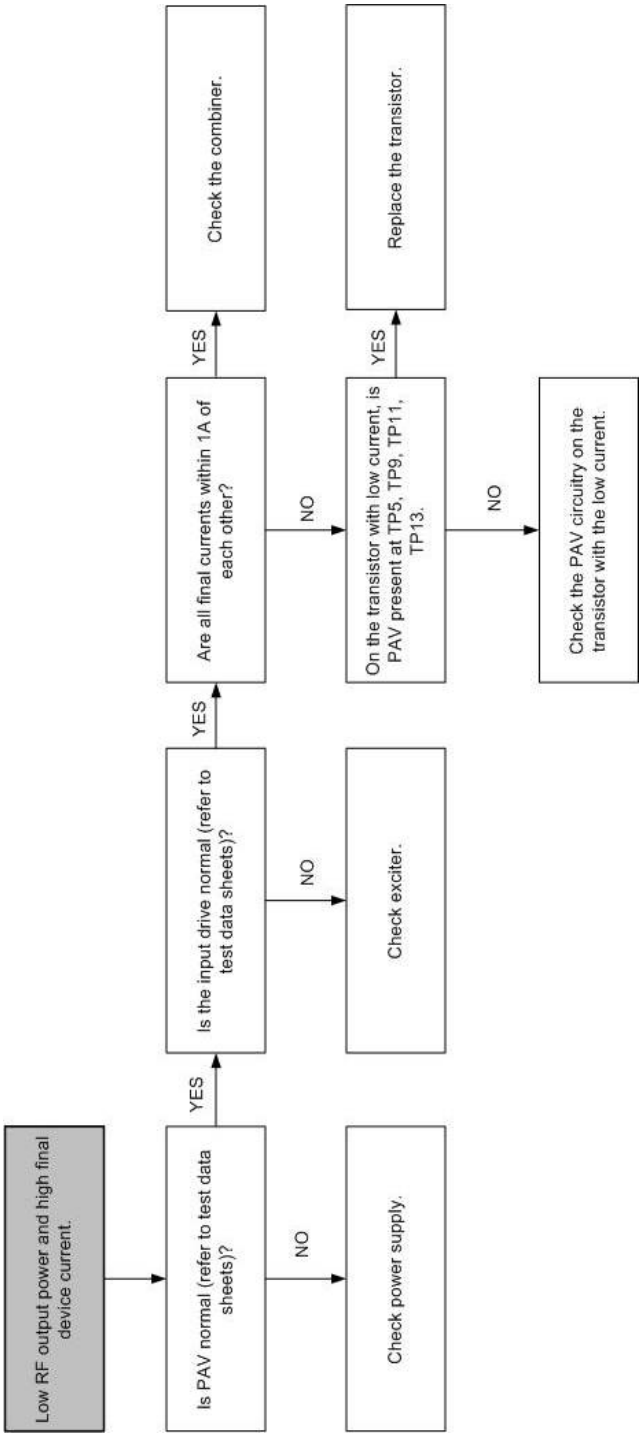

Figure 10-2: STXLP Troubleshooting (Sheet 4 of 5) – 1kW Model

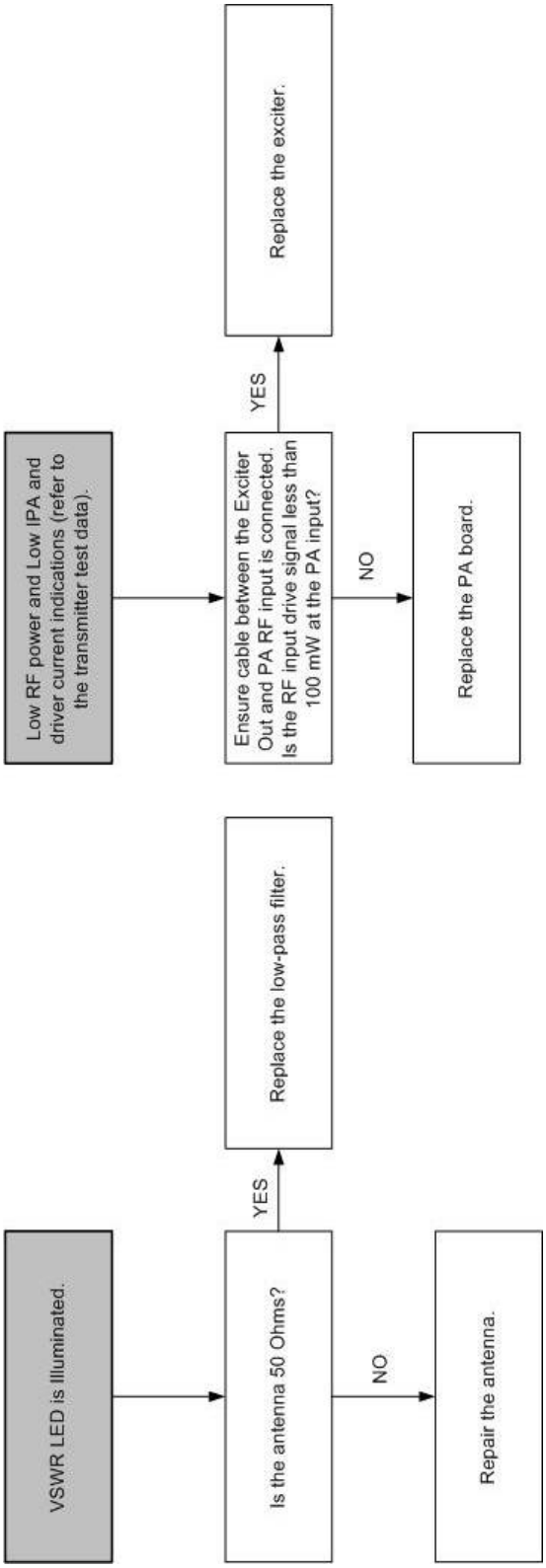

Figure 10-2: STXLP 1kW Troubleshooting (Sheet 5 of 5) 1kW Model

©2013 Broadcast Electronics

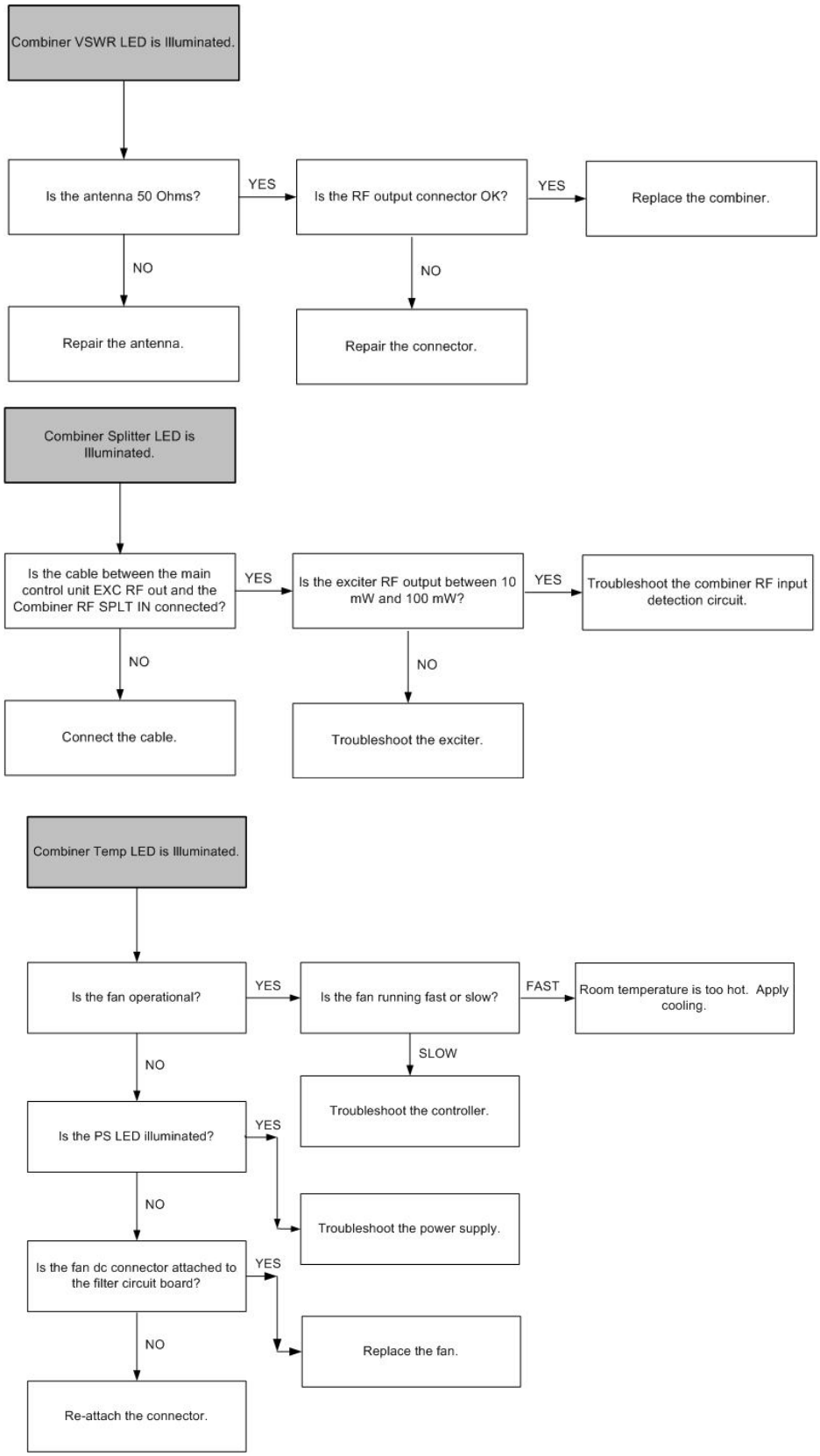

Figure 10-3: STXLP Troubleshooting (Sheet 1 of 2) 2kW/3kW/5kW Models

©2013 Broadcast Electronics

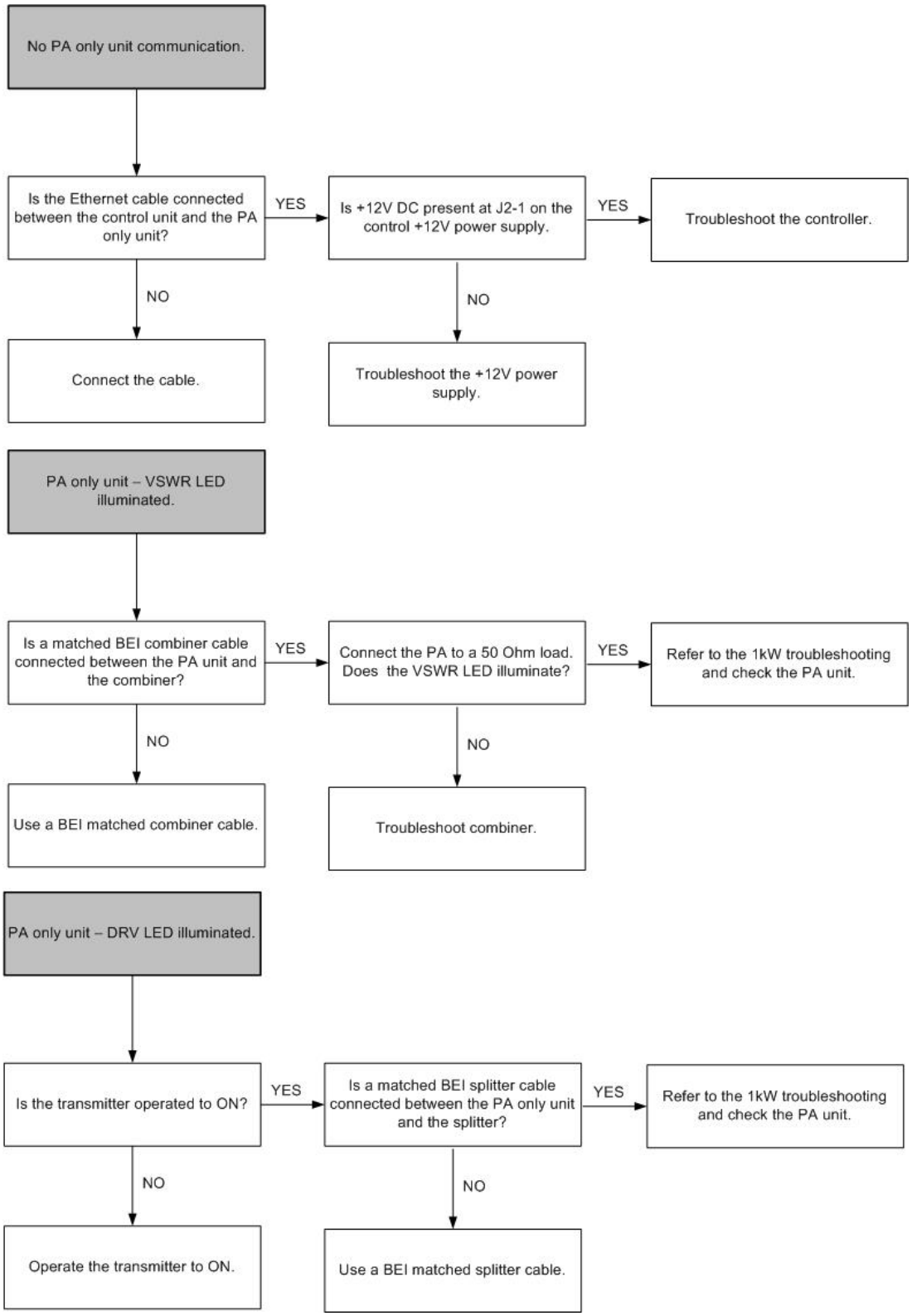

Figure 10-4: STXLP Troubleshooting (Sheet 2 of 2) 2kW/3kW/5kW Models

©2013 Broadcast Electronics

10.7 Replace the Exciter

To replace the exciter, refer to Figure 10-5 and proceed as follows:

WARNING: ENSURE ALL PRIMARY POWER IS DISCONNECTED BEFORE PROCEEDING.

1. Disconnect all transmitter primary power.
2. Using a screwdriver, remove the transmitter top cover.
3. Remove the BNC lock nuts from the COMP, SCA2, 19 kHz OUT, EXC RF OUT, SCA1, and RDS connectors.
4. Remove the screws from the AES, LEFT, and RIGHT XLR connectors.
5. Disconnect power control cable J7 and ribbon cable J2.
6. Remove the mounting screw.
7. Firmly remove the board from the unit.
8. Snap the new exciter circuit board into the standoffs and secure the mounting screw.
9. Re-connect the cables.
10. Re-connect the VCO.
11. Replace the BNC lock nuts and the XLR hardware.
12. Replace the transmitter top cover.

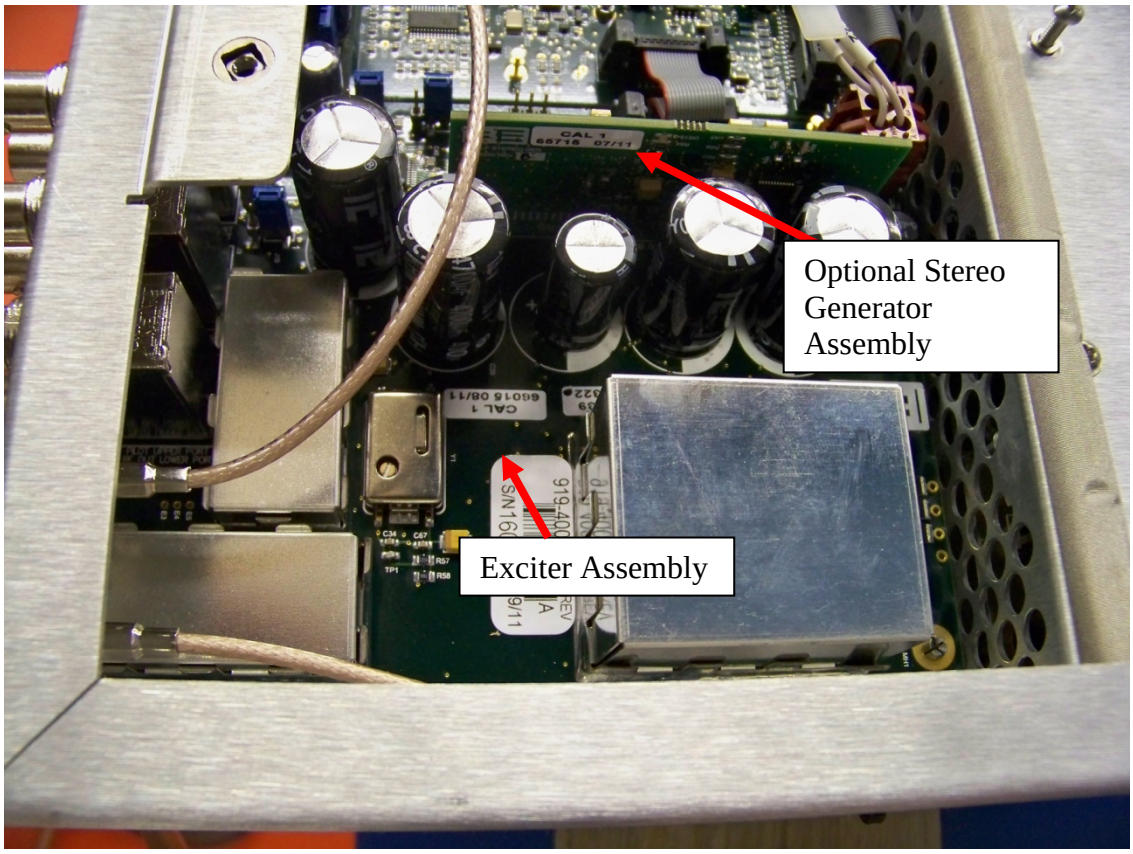

Figure 10-5: Replacing the Exciter/Stereo Generator

©2013 Broadcast Electronics

10.8 Replace the Optional Stereo Generator

To replace the optional stereo generator, refer to Figure 10-5 and proceed as follows:

WARNING: ENSURE ALL PRIMARY POWER IS DISCONNECTED BEFORE PROCEEDING.

CAUTION: TO REMOVE OR INSERT THE STEREO GENERATOR PCB, GENTLY ROCK THE PCB IN THE SOCKET TO PREVENT DAMAGE TO THE SOCKET PINS.

1. Disconnect all transmitter primary power.
2. Using a screwdriver, remove the transmitter top cover.
3. Unplug the stereo generator from the socket.
4. Align the stereo generator circuit board tab with the hole and insert the replacement board.
5. Replace the transmitter top cover.

10.9 Replace the Controller

To replace the controller in 1 kW models (the main control unit in 2 kW, 3 kW, and 5 kW models), refer to Figure 10-6 and proceed as follows:

WARNING: ENSURE ALL PRIMARY POWER IS DISCONNECTED BEFORE PROCEEDING.

1. Disconnect all transmitter primary power.
2. Using a screwdriver, remove the transmitter top cover.
3. Disconnect ribbon cables connected to J10, J7, J8, and J13.
4. Disconnect dc power cable J14.
5. Remove the mounting screw.
6. Firmly remove the board from the unit.
7. Snap the new controller circuit board into the standoffs and secure the mounting screw.
8. Re-connect the cables.
9. Replace the transmitter top cover.

©2013 Broadcast Electronics

Figure 10-6: Replacing the Controller

©2013 Broadcast Electronics

10.10 Replace the Fan

To replace the fans in PA units, refer to Figure 10-7 and proceed as follows:

WARNING: ENSURE ALL PRIMARY POWER IS DISCONNECTED BEFORE PROCEEDING.

1. Disconnect all transmitter primary power.
2. Using a screwdriver, remove the transmitter top cover.
3. Cut safety tie-wrap holding fan assembly in.
4. Disconnect the cables connected to the fan and PA Power supply Mother board.
5. Disconnect the fan assembly power supply cable.
6. Lift the assembly up and out of the unit.
7. Insert the new fan assembly.
8. Re-connect the power supply cable.
9. Secure a tie-wrap as was removed.
10. Replace the transmitter top cover.

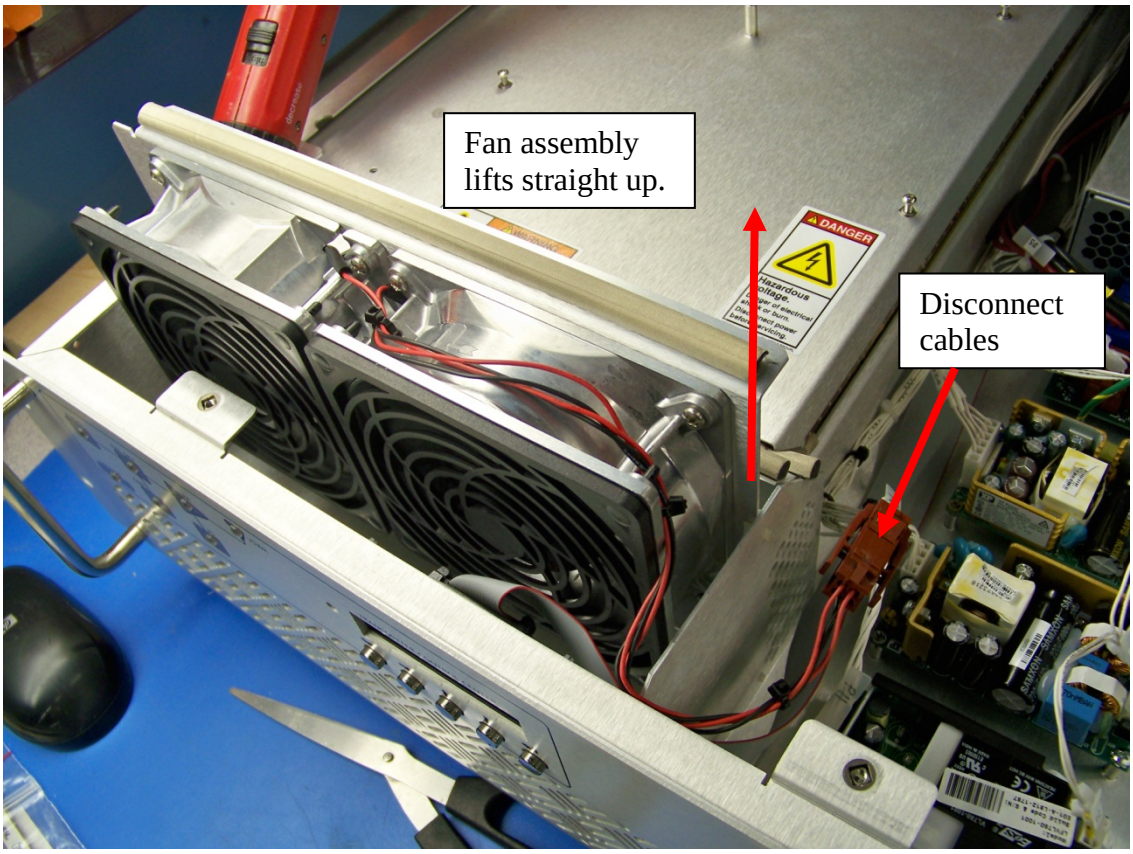

Figure 10-7: Replacing the Fan

©2013 Broadcast Electronics

10.11 Replace the PA Module Assembly

The PA module consists of the PA assembly and the combiner assembly. To replace the PA module assembly PA units, refer to Figure 10-8 and proceed as follows:

WARNING: ENSURE ALL PRIMARY POWER IS DISCONNECTED BEFORE PROCEEDING.

1. Disconnect all transmitter primary power.
2. Using a screwdriver, remove the transmitter top cover.
3. Remove the PA cover.
4. Unsolder the 3 RF output wires (RF output and 2 ground) from the PA module.
5. Disconnect the ribbon cable connected to J13.
6. On the PA, remove the mounting hardware from transistors Q1 thru Q4 and Q8.
7. On the combiner, remove the mounting hardware from R1, R2, and R3.
8. Remove the mounting hardware from the PA and combiner circuit boards.
9. Remove the PA module assembly.
10. Remove the PA module assembly from the shipping plate.
11. Apply thermal compound to the PA transistors and the combiner resistors.
12. Gently place the PA module assembly on the heatsink.
13. Secure the PA transistor hardware the combiner resistor hardware.
14. Secure the PA and combiner mounting hardware.
15. Re-solder the RF output wires to the PA module.
16. Re-connect the cable.
17. Replace the PA cover
18. Replace the transmitter top cover.

©2013 Broadcast Electronics

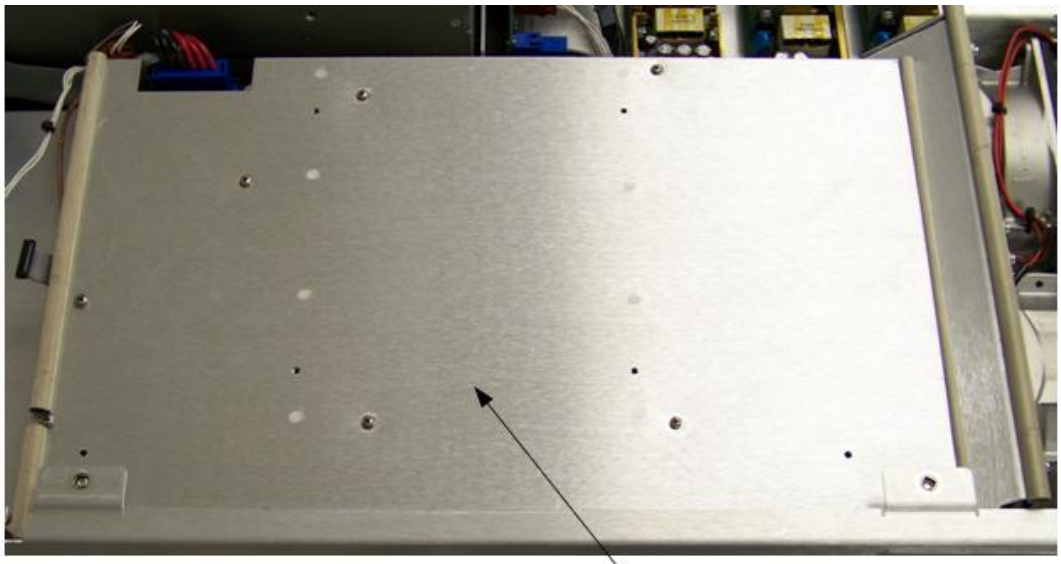

PA COVER

PA MODULE

COMBINER

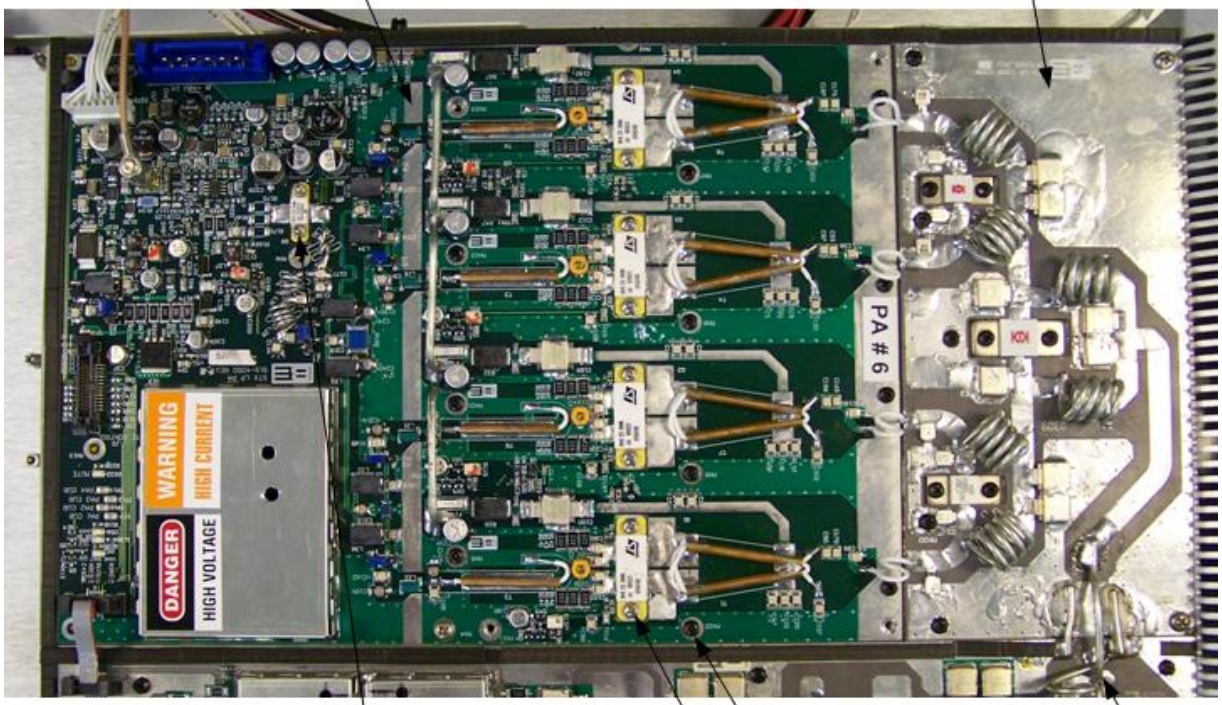

TRANSISTOR MOUNTING SCREWS

RF OUTPUT (1) AND GROUND WIRES(2)

MOUNTING SCREWS

Figure 10-8: Replacing the PA Module

©2013 Broadcast Electronics

10.12 Replace the PA Power Supply Module

To replace a PA power supply module assembly in PA units, refer to Figure 10-9 and Figure 10-10 and proceed as follows:

WARNING: ENSURE ALL PRIMARY POWER IS DISCONNECTED BEFORE PROCEEDING.

1. Disconnect all transmitter primary power.
2. Using a Philips screwdriver, remove the power supply cover plate on the transmitter rear panel.
3. Insert Philips screwdriver into exposed holes to loosen 2 Philips screws inside allowing retainer to be slide to the side (on -007 power supplies only).
4. Unlock the power supply by rotating the power supply locking knob counterclockwise to disengage the mechanism.
5. Gently pull on the power supply handle and slide the unit out of the chassis.
6. Insert and slide the new power supply into the chassis. Firmly push the unit to engage the power supply connector.
7. Lock the power supply by rotating the power supply locking knob clockwise to engage the mechanism.
8. Slide retainer over and tighten screws (on -007 power supplies only).
9. Replace the power supply cover plate.

©2013 Broadcast Electronics

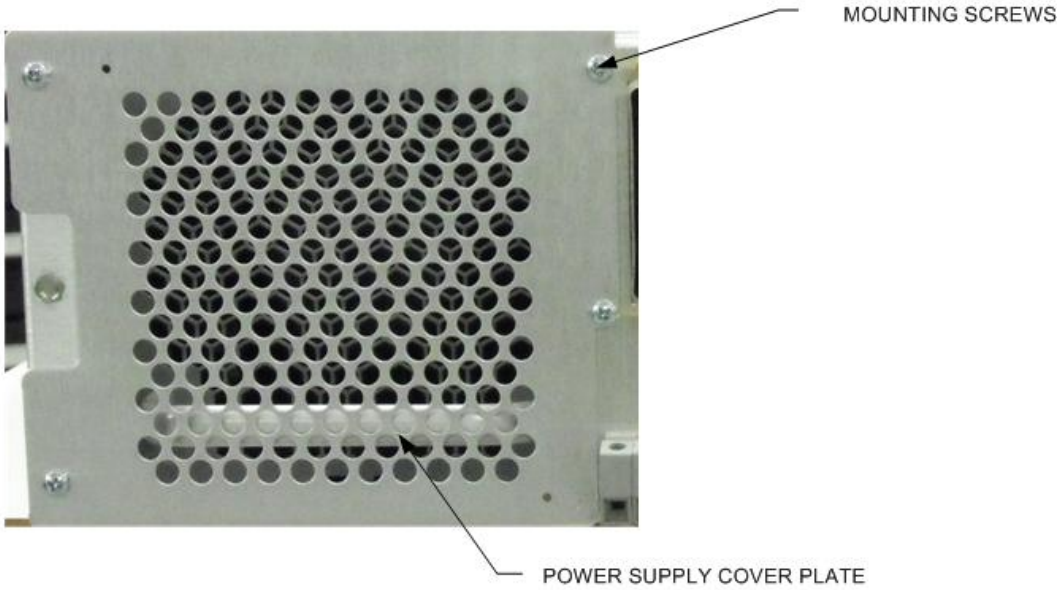

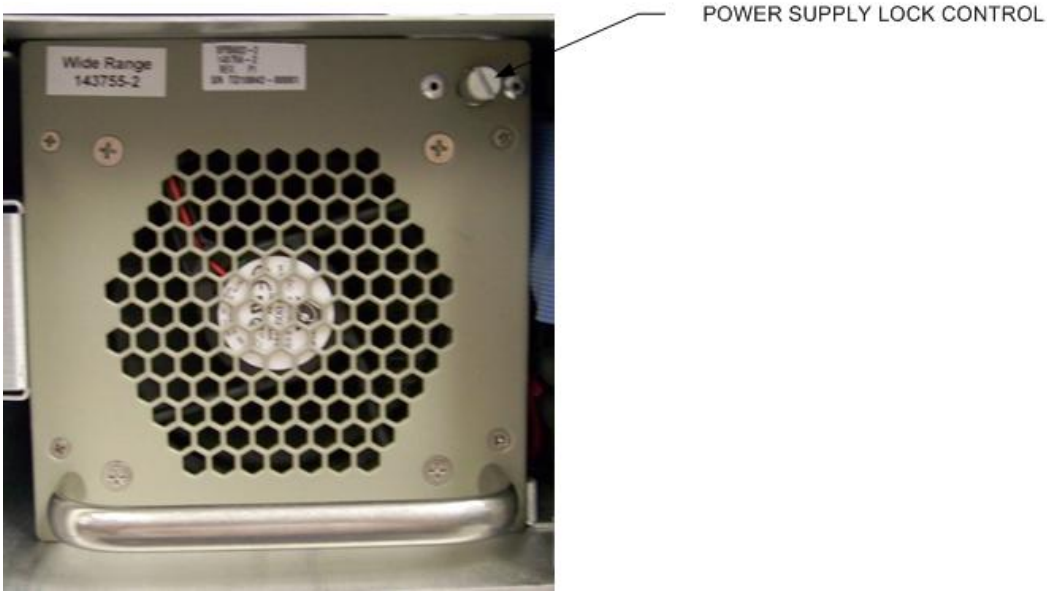

Figure 10-9: Replacing the -002 Power Supply Module

©2013 Broadcast Electronics

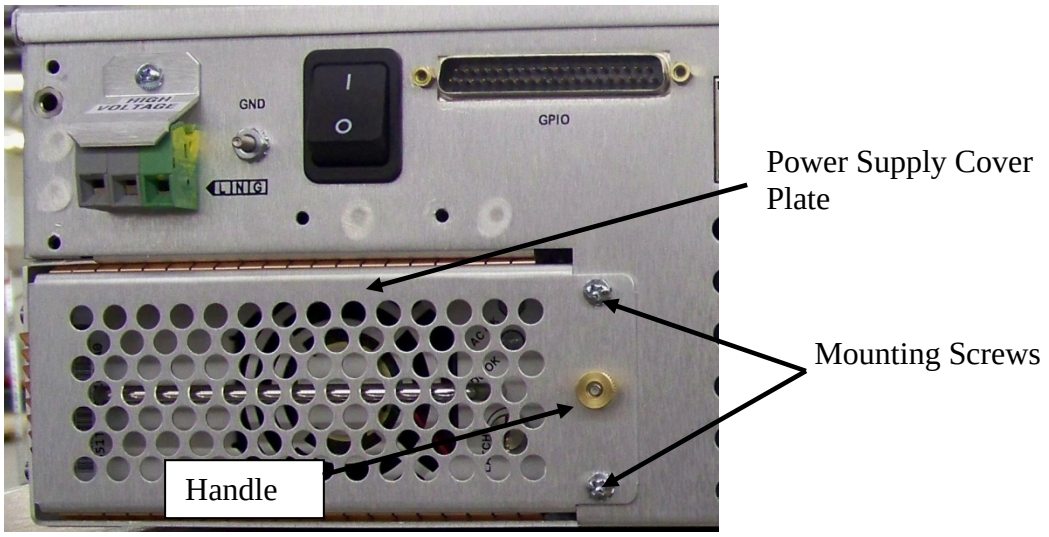

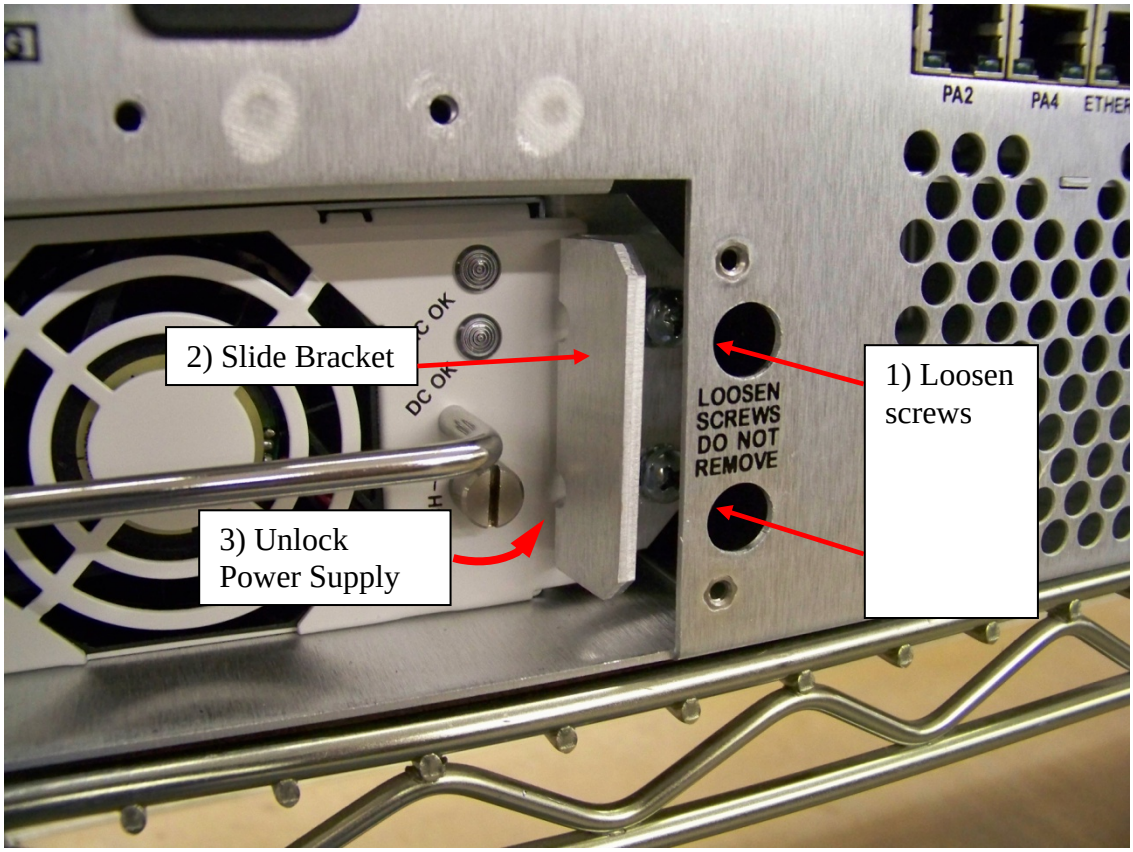

Figure 10-10: Replacing the -007 Power Supply Module

10.13 Replace the Front Panel Display Board

To replace the front panel display board in PA units, refer to Figure 10-11 and proceed as follows:

WARNING: ENSURE ALL PRIMARY POWER IS DISCONNECTED BEFORE PROCEEDING.

1. Disconnect all transmitter primary power.
2. Using a screwdriver, remove the transmitter top cover.
3. Disconnect the ribbon cable connected to J2.
4. Using a flat-blade screw driver, gently pry the front panel circuit board from the chassis.
5. Snap the new front panel circuit board into the standoffs.
6. Re-connect the ribbon cable.
7. Replace the transmitter top cover.
1. Replace the transmitter top cover.

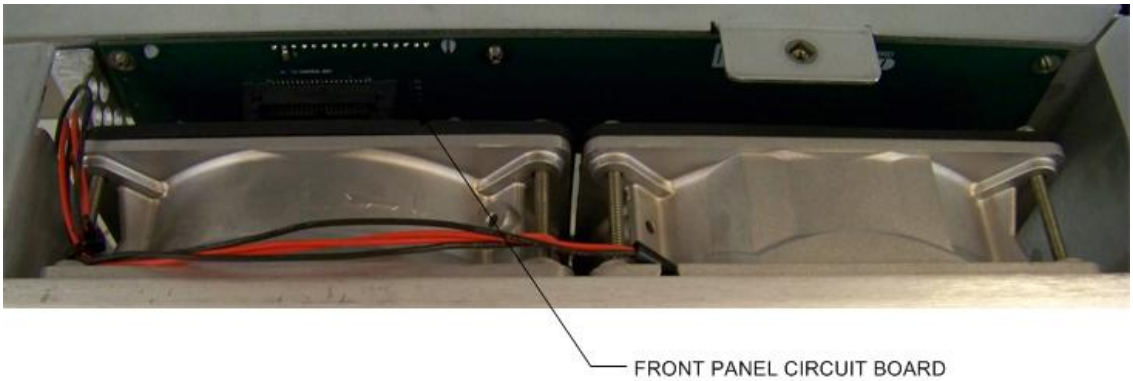

Figure 10-11: Replacing the Front Panel Display Board

10.14 Replace the Low-Pass Filter Assembly

To replace the low-pass filter in PA units, refer to Figure 10-12 and proceed as follows:

WARNING: ENSURE ALL PRIMARY POWER IS DISCONNECTED BEFORE PROCEEDING.

2. Disconnect all transmitter primary power.
3. Using a screwdriver, remove the transmitter top cover.
4. Disconnect the ribbon cable connected to J1.
5. Remove the hardware from the RF OUT and RF SAMPLE connectors.
6. Unsolder the RF input wires from the low-pass filter circuit board.
7. Remove the low-pass filter mounting hardware.
8. Insert the new low-pass filter assembly and secure the mounting hardware.
9. Re-connect the ribbon cable.
10. Re-solder the RF input wires to the low-pass filter circuit board.

©2013 Broadcast Electronics

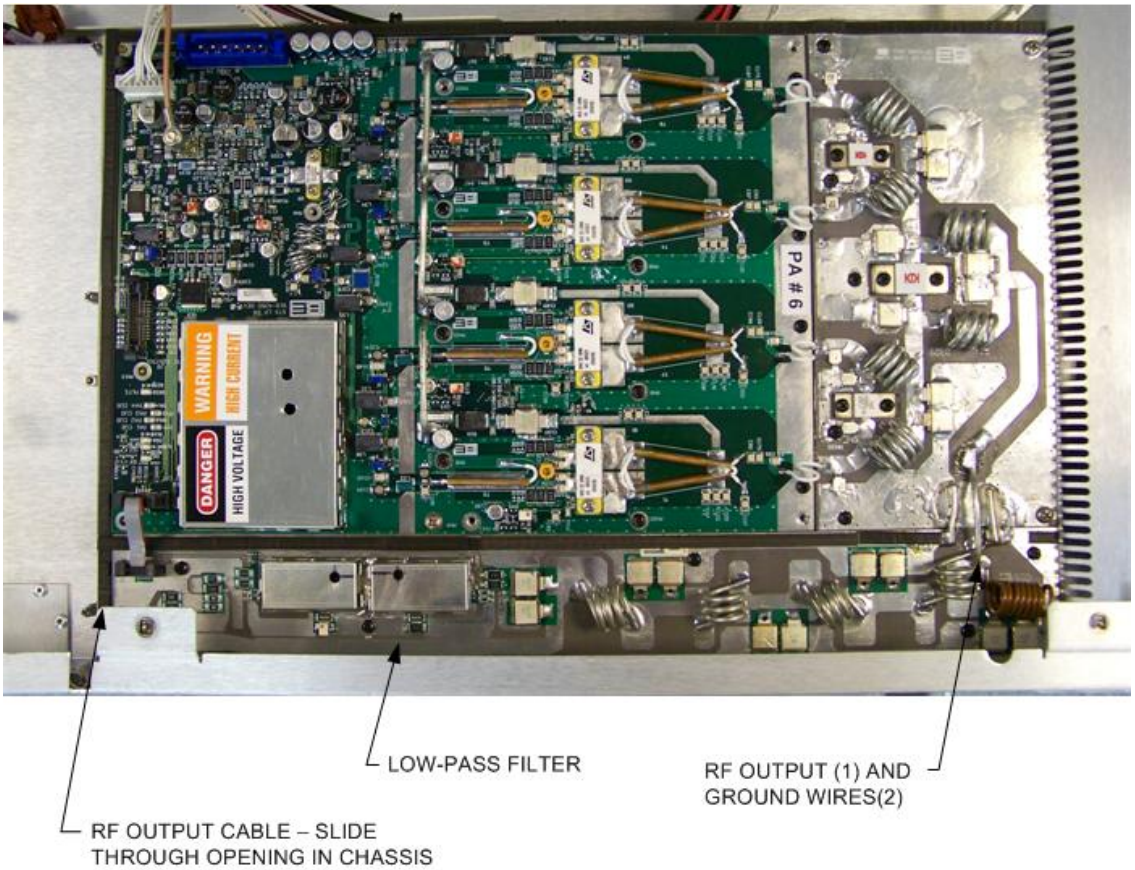

Figure 10-12: Replacing the Low-Pass Filter

10.15 Replace a Final Transistor on the PA Module

To replace a transistor on a PA module, refer to Figure 10-13 and perform the following procedure. The procedure replaces and adjusts section Q1. Sections Q2 through Q4 are identical.

WARNING: ENSURE ALL PRIMARY POWER IS DISCONNECTED BEFORE PROCEEDING.

1. Disconnect all transmitter primary power.
2. Using a screwdriver, remove the transmitter top cover.
3. Remove the PA cover.
4. Replace Q1 transistor as follows:
   A. Refer to Figure 10-13 and locate transistor section Q1.
   B. Unsolder the leads from the transistor.
   C. Remove the mounting hardware.
   D. Apply a film of thermal grease to the transistor flange.
   E. Secure the transistor to the heatsink using the mounting hardware.
   F. Solder the transistor leads to the pads.
5. Align the transistor as follows:
   A. Remove P6/P10.
   B. Adjust potentiometer R137 for 0.8 Amps on the FINAL I display.
   C. Replace P6/P10 in position 2-3.

©2013 Broadcast Electronics

D. On the front panel display, access the main menu to display forward power.
E. Adjust capacitors C104/C105/C101 for maximum output power on the front panel display.
F. On the front panel display, access the PA Data.
G. Check the Q1 final current. The current should be nearly identical to the currents displayed for Q2 through Q4.
H. If the current requires adjustment, re-adjust C104/C105/C101 for a current reading similar to Q2 through Q4.

6. Replace the PA cover.
7. Replace the transmitter top cover.

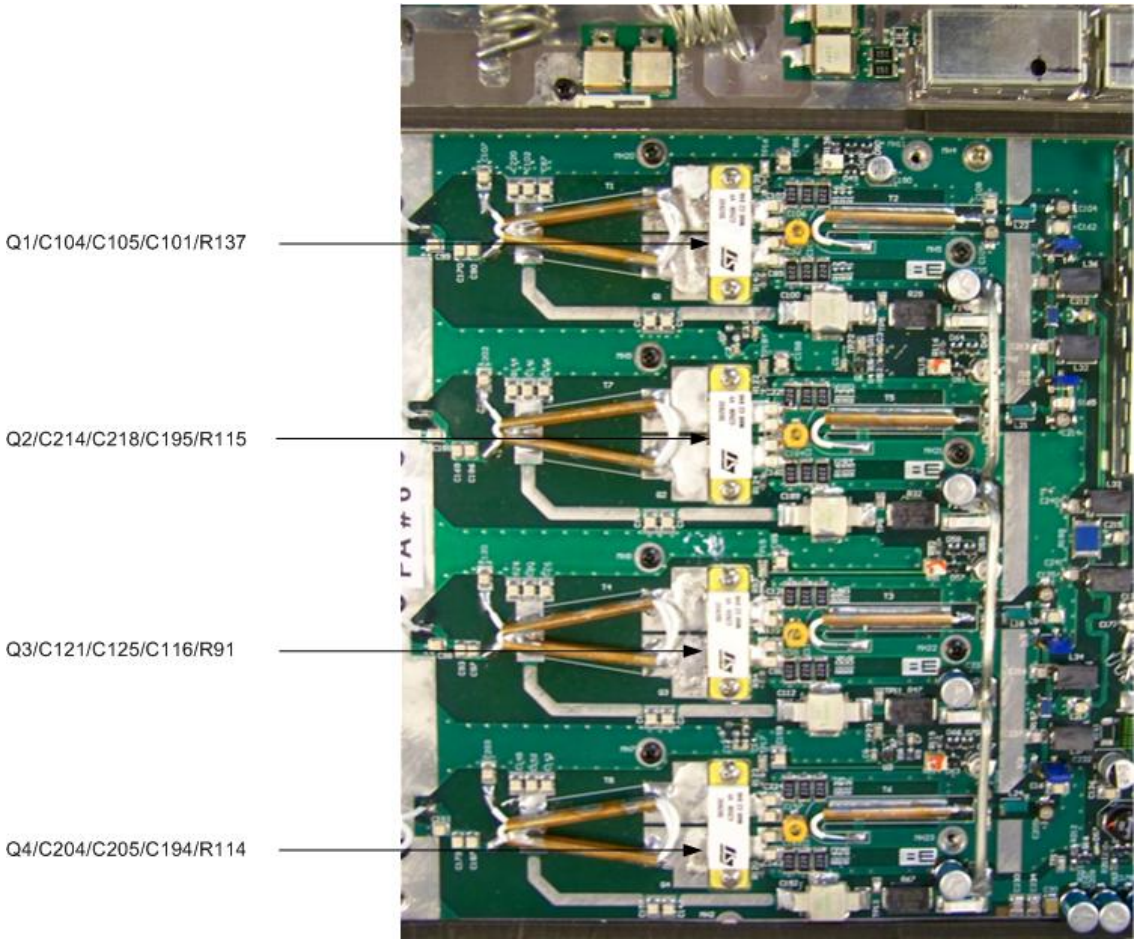

Figure 10-13: Replacing A Transistor On The PA Module

©2013 Broadcast Electronics

10.16 Replace the add-on PA Unit Controller

To replace the controller in an add-on PA unit used in STX2, STX3 and STX5, refer to Figure 10-14 and proceed as follows:

WARNING: ENSURE ALL PRIMARY POWER IS DISCONNECTED BEFORE PROCEEDING.

1. Disconnect all transmitter primary power.
2. Using a screwdriver, remove the top cover.
3. Disconnect ribbon cable connected to J2.
4. Disconnect dc power cable J3.
5. Remove the mounting screw.
6. Firmly remove the board from the unit.
7. Snap the new controller circuit board into the standoffs and secure the mounting screw.
8. Re-connect the cables.
9. Replace the transmitter top cover.

Figure 10-14: Replacing the add-on PA Controller

10.17 Replace the Combiner Fan

To replace the combiner fan, refer to Figure 10-15 and proceed as follows:

WARNING: ENSURE ALL PRIMARY POWER IS DISCONNECTED BEFORE PROCEEDING.

1. Disconnect all transmitter primary power.
2. Using a screwdriver, remove the combiner top cover.
3. Rotate the two tabs 90˚ to allow tab to slip out of slot.
4. Cut the two wire ties securing the top corners of the fan to the chassis
5. Slide the fan out of the assembly.
6. Un-plug the fan dc connector from the header.
7. Slide the replacement fan into the assembly.
8. Re-connect the fan dc connector.
9. Insert the two tabs into the slots pulling tight until the tabs can return to the original orientation.
10. Install two wire ties where previously removed.
11. Replace the combiner top cover.

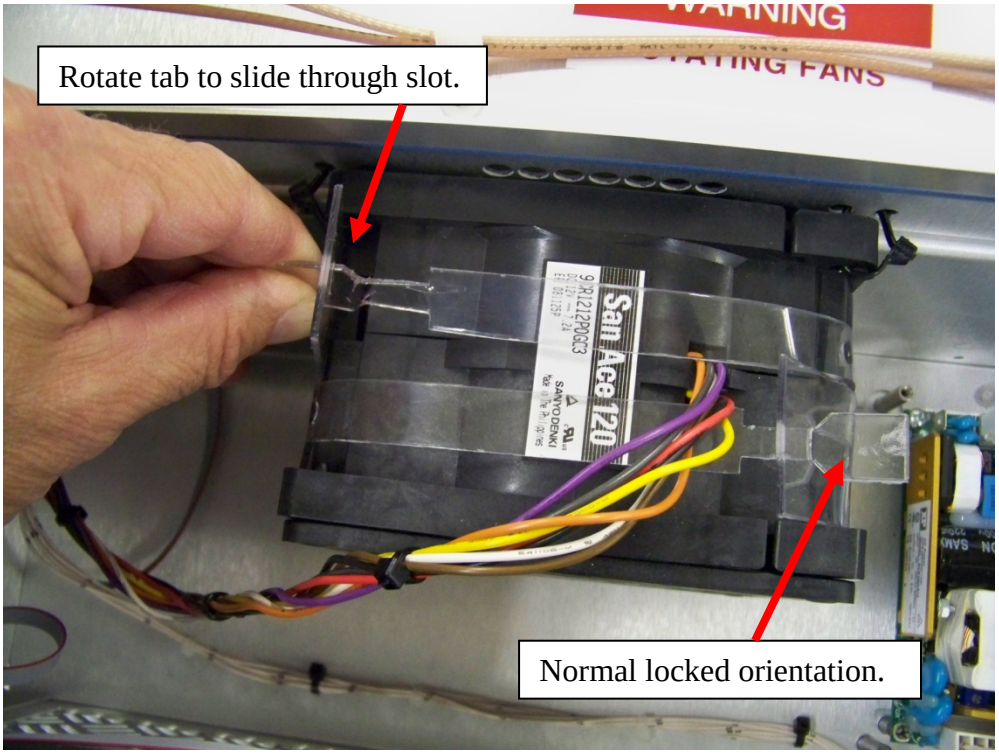

Figure 10-15: Replacing the Combiner Fan

10.18 Replace the Combiner Fan or Low Voltage Power Supply

To replace the combiner fan, refer to Figure 10-16 and proceed as follows:

WARNING: ENSURE ALL PRIMARY POWER IS DISCONNECTED BEFORE PROCEEDING.

1. Disconnect all transmitter primary power.
2. Using a screwdriver, remove the combiner top cover.
3. Refer to Figure 10-16 and locate the desired supply to be replaced.
4. Disconnect the power supply ac input and dc output connectors.
5. Remove the mounting screws and the power supply.
6. Insert the replacement power supply and secure the mounting screws.
7. Re-connect the power supply cables.
8. Replace the combiner top cover.

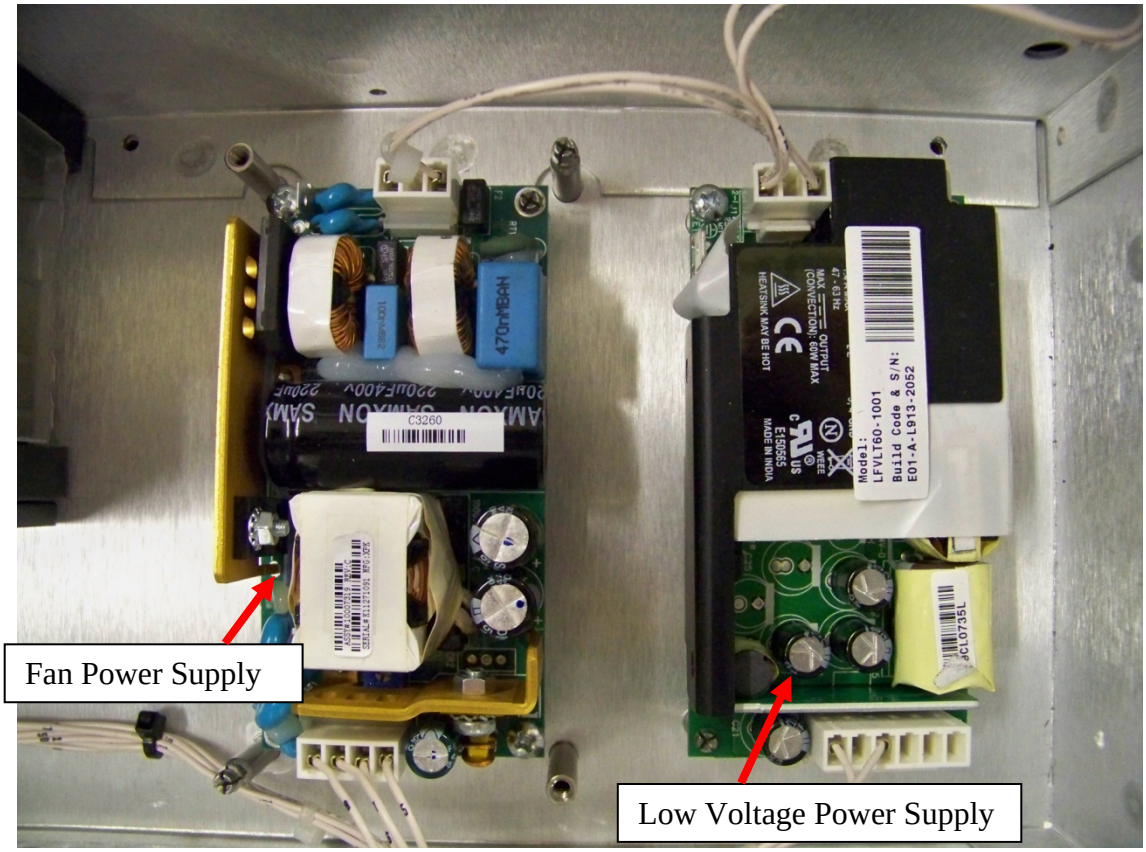

Figure 10-16: Replacing the Combiner Power Supply

11 BE Part Numbers

This section provides parts lists for the STX LP Transmitters. The parts lists provide descriptions and part numbers of electrical components, assemblies, and selected mechanical parts required for maintenance. Each parts list entry in this section is indexed by reference designators appearing on the applicable schematic diagrams.

This bill of material uses an indented structure to show relationships of parts into sub assemblies. Example; all BOM LEVEL 2 parts are contained in the BOM LEVEL 1 part immediately above it.

BOM LEVEL	PART NO.	DESCRIPTION	QTY	REF. DES.
0	909-4102-001	TX,FM,STX,1KW,NO MAN/INST KITS		
..1	400-0207	STRIP,QUIET SHIELD,.250x.375""	7.083	
..1	420-6606	SCREW,6-32X.375,S.S. PH FH UC	9	
..1	421-6020	6-32 THUMB NUT	1	
..1	422-6106	SCREW,SEMS 6-32 X 3/8 PAN PH. ST."	3	
..1	469-0366	FINGER STOCK (NOTE!!!!!)	0.111	
..1	469-5500	FINGER STOCK,TECH-ETCH 250P37-16-02	0.833	
..1	471-4205-100	COVER WELDMENT,STX LP,NEW PS	1	
..1	471-4209-200	COVER,NEW PS,STX LP	1	
..1	471-4225	SAFETY SHIELD FOR ELECTRICAL SOURCE STX LP	1	
..1	594-0019	LABEL,DANGER HV 1X 1.5	1	
..1	594-0505	LABEL, WARNING-ONLY AUTHORIZED PERSONNEL	1	
..1	909-4102-001T	TX,FM,STX,1KW,NO MAN/INST KITS,BASIC TEST	1	
....2	324-2500	LIGHTPIPE,0.197 DIA,0.5 LONG, PANEL MT.	7	
....2	349-0020	SWITCH, ROCKER, DPST, 20A	1	
....2	400-0207	STRIP,QUIET SHIELD,.250x.375""	6	
....2	409-0126	CARD GUIDE,4.5 LG	2	
....2	411-7086	TERM BLK FEED-THRU 1-4MM GRAY	2	
....2	411-7866	TERM BLK,FEED-THRU,1-4MM GRN/YEL	1	
....2	420-0817	ASSY,FEMALE SCREWLOCK 205817-1	1	
....2	420-3151	SCREW,M3X8MM,PPH,SEM,STEEL,ZINC PLATING	6	
....2	420-4124	SCREW,4-40X1.500,S.S. PH	6	
....2	420-6114	SCREW,6-32X.875,S.S. PH	4	
....2	420-9720	RETAINER,NUT,OD:0.26,FITS SHAFT 5/32""	7	
....2	421-6008	6-32 KEP NUT	3	
....2	422-0110	SCREW,10-32 X 5/8,PPH,SEM,STEEL,ZINC PLATING"	6	
....2	422-6106	SCREW,SEMS 6-32 X 3/8 PAN PH. ST."	10	
....2	423-4002	#4 LOCK S.S. SPLIT	7	
....2	423-6002	#6 LOCK SPLIT	4	
....2	441-0184	STOFF,6-32,MALE-FEMALE,3/8	1	
....2	441-4513	STOFF,SS,3/16 HEX X 1" LONG, MALE-FEMALE 440"	1	
....2	467-0001	EXTRUSION,RUBBER	0.063	
....2	469-0022	FINGER STOCK,LAIRD 97-654,12 LONG"	2	
....2	471-4200-300	WELDMENT,CHASSIS,STX 1KW,NEW PS	1	

©2013 Broadcast Electronics

BOM LEVEL	PART NO.	DESCRIPTION	QTY	REF. DES.
....2	471-4201-100	PLENUM, FAN, STX LP	1	
....2	471-4207	FRONT PANEL, STX LP, BASE UNIT, SCREENED	1	
....2	471-4212	COVER,PA,STX LP	1	
....2	471-4260-100	RETAINER,NEW PS,STX LP	1	
....2	471-4262	SPACER PLATE,LPT,STX 1K	1	
....2	471-4264	GUARD,STX NEW PS	1	
....2	486-7150	HANDLE, 4 X 1.375", BRASS, CHROME PLATED, #10-32 THREADS"	2	
....2	500-211	Screw,SEMS 4-40x3/8 Ph Pan Head MS Black Zinc (External)	9	
....2	510-246	Flexible Grommet, (NOTE)	0.213	
....2	540-0016-007	PWR SPLY,PFC 53VDC,2KW, TECTROL	1	
....2	540-1012-100	POWER SUPPLY, 12V 65W AC/DC CONVERTER 2X4" STX LP"	1	
....2	540-1012-501	POWER SUPPLY 12V 80/100W AC/DC 2X4IN	1	
....2	540-1205	POWER SUPPLY, AC/DC CONVERTER, 40W, +/-12V +5V	1	
....2	594-0073	LABEL,WARNING ROTATING FANS	1	
....2	594-0503	LABEL, DANGER-HAZARDOUS VOLTAGE	1	
....2	594-0505	LABEL, WARNING-ONLY AUTHORIZED PERSONNEL	1	
....2	640-1001	WIRE, 10 GA, TIN PLATED	0.25	
....2	700-0089	TAPE,POLYMER,3/4 (54FT ROLLS)	0.012	
....2	849-2010	CBL,ASSY,.050 DOUBLE ROW 10 PIN FEMALE IDC ASSEMBLY,2 INCH	1	
....2	849-2016	CBL,ASSY,.050 DOUBLE ROW 16 PIN FEMALE IDC ASSEMBLY,2 INCH	1	
....2	849-2026	CBL,ASSY,.050 DOUBLE ROW 26 PIN FEMALE IDC ASSY,3.63 INCH	1	
....2	849-2040	CBL,ASSY,.050 DOUBLE ROW 40 PIN FEMALE IDC ASSEMBLY,32 INCH	1	
....2	919-4000	ASSY, PCB, EXCITER, STX LP (SBCM)	1	
.....3	007-0010	CHIP CERAMIC 10pF 50V 5% 0603 SMD	5	C27, C80, C102, C103, C104
.....3	007-0018-006	CAP,0603,18pF,50V,5%	1	C124
.....3	007-0102	CAP,CER,CHIP,1000pF,50V,5%,SMD	7	C24, C28, C30, C31, C32, C120, C126
.....3	007-0270-006	CAP,270pF,50v,5%,0603	1	C130
.....3	007-1012	CAP,CER,10pF,50V,2%,SMD	3	C48, C123, C125
.....3	007-1024	CAP,CER,.001uF,50V,10%,SMD	2	C85, C86
.....3	007-1040-025	CAP,CER,.1UF,+80,-20%,25V,0603,SMD	45	C1, C2, C3, C8, C11, C12, C15, C18, C19, C20, C21, C29, C34, C35, C36, C37, C38, C42, C43, C44, C46, C47, C49, C50, C51, C53, C54, C56, C57, C61, C65, C66, C67, C68, C71, C74, C78, C79, C88, C106, C108, C109, C111,

©2013 Broadcast Electronics

BOM LEVEL	PART NO.	DESCRIPTION	QTY	REF. DES.
				C128, C131
.....3	007-1044	CAP,CER,0.1uF,50V,10%,SMD note	8	C6, C14, C45, C55, C62, C95, C122, C132
.....3	007-1054-001	CAP,CER,1UF,10%,10V,X7R,0805,SMD	1	C41
.....3	007-1075-100	CAP, CER CHIP, 10 UF, 10V, 1206	7	C58, C59, C89, C90, C97, C98, C99
.....3	007-1085-350	CAP,ELECTRO,100uF,35V,20%,SMD	8	C82, C84, C94, C100, C101, C118, C119, C121
.....3	007-1512-050	Cap,Cer,15 pF 5%,0603,50V,SMD	1	C25
.....3	007-3312	CAP,CER,33pF,50V,2%,SMD	1	C127
.....3	007-5100	CAP,CER,5.1pF,50V,.25pF,SMD	3	C23, C73, C107
.....3	007-5600	CAP,CER,5.6pF,50V,.25pF,SMD	1	C26
.....3	009-0202	CAP,TANALUM CHIP,100UF,POLAR,10%,6V,SMD	2	C7, C60
.....3	020-1087	CAP,LYTIC,100uF,16V,20%,NP	4	C70, C72, C75, C77
.....3	020-4793	CAP,LYTIC,4700UF,16V,LOW LEAK	4	C33, C39, C40, C92
.....3	023-1075	CAP,LYTIC,10UF,50V NP STDUP	1	C5
.....3	024-0102	CAP,LYTIC,1000uF,35V,20%,LOW ESR,RADIAL	1	C83
.....3	070-1054	CAP,TANT,1uF,35V,10%,SMD	1	C93
.....3	070-1065	CAP,TANT,10UF,20V,10%,SMD	8	C4, C17, C22, C52, C63, C81, C87, C91
.....3	070-1084-L16	CAP,TANT,100 MFD,20%,16V,E CASE,LOW ESR,SMD	1	C133
.....3	101-0150	Resistor,150 ohm 1/2W 5% SMD 2010	1	R111
.....3	102-0000	RES,CHIP,0 OHM,0805,SMD	11	R39, R51, R52, R53, R54, R88, R104, R105, R125, R133, R138
.....3	102-1000	RES,CHIP,100 OHMS,1/10W,1%,SMD	13	R48, R87, R91, R93, R97, R108, R134, R135, R136, R137, R159, R161, R165
.....3	102-1001	RES,CHIP,1.00K OHMS,1/10W,1%,SMD	20	R9, R11, R15, R16, R21, R23, R27, R29, R38, R40, R62, R84, R85, R99, R101, R114, R145, R146, R147, R168
.....3	102-1002	RES,CHIP,10.0K OHMS,1/10W,1%,SMD	35	R1, R2, R3, R4, R30, R33, R45, R49, R50, R56, R58, R60, R61, R63, R65, R66, R67, R68, R69, R70, R71, R72, R73, R74, R75, R76, R77, R78, R79, R80, R83, R86, R89, R94, R106
.....3	102-1003	RES,CHIP,100K OHMS,1/10W,1%,SMD	17	R6, R7, R8, R10, R12, R13, R14, R17, R18, R19, R20, R31, R32, R112, R152,

©2013 Broadcast Electronics

BOM LEVEL	PART NO.	DESCRIPTION	QTY	REF. DES.
				R167, R172
.....3	102-1004	RES,CHIP,1.00M OHMS,1/10W,1%,SMD	1	R100
.....3	102-1200	RES,CHIP,121 OHMS,1/10W,1%,SMD (NOTE)	1	R118
.....3	102-1400	RES,CHIP,1.4K OHMS,1/10W,1%,SMD	1	R163
.....3	102-1500	RES,CHIP,150 OHMS,1/10W,1%,SMD	1	R160
.....3	102-1741	RES,CHIP,1.74K OHMS,1/10W,1%,SMD	4	R92, R98, R140, R142
.....3	102-2000	RES,CHIP,200 OHM,1/10 W,1% SMD	5	R35, R81, R82, R113, R164
.....3	102-2001	RES,CHIP,2.00K OHMS,1/10W,1%,SMD	2	R41, R148
.....3	102-2002	RES,CHIP,20.0K OHMS,1/10W,1%,SMD	1	R158
.....3	102-2214	RES,CHIP,2.21K OHM,1/10W,1%	1	R124
.....3	102-2741	RES,CHIP,2.74K OHMS,1/10W,1%,SMD	2	R34, R157
.....3	102-3011	RES,CHIP,3.01K OHMS,1/10W,1%,SMD	1	R44
.....3	102-3160	RES,CHIP,3.16K OHMS,1/10W,1%,SMD	1	R116
.....3	102-3321	RES,CHIP,3.32K OHMS,1/10W,1%,SMD	1	R162
.....3	102-3570	RES,CHIP,357 OHMS,1/10W,1%,SMD	1	R25
.....3	102-3653	RES,CHIP,365 OHM,1/10W,1%	1	R122
.....3	102-4221	RES,CHIP,4.22K,1/10W,1%,SMD	3	R57, R28, R26
.....3	102-4750	RES,CHIP,475 OHMS,1/10W,1%,SMD	1	R36
.....3	102-4991	RES,CHIP,49.9 OHMS,1/10W,1%,SMD	3	R37, R102, R107
.....3	102-4993	RES,CHIP,499K OHMS,1/10W,1%,SMD	1	R5
.....3	102-5041	RES,4.99K OHM,1/10W,1%	1	R22
.....3	102-5110	RES,CHIP,511 OHMS,1/10W,1%,SMD	4	R95, R131, R141, R143
.....3	102-5112	RES,CHIP,51.1 OHM,1/10W,1%	1	R156
.....3	102-5622	RES, 5.62K OHM, 1%, 1/10W, SMD	1	R115
.....3	102-6040	RES,604 OHM,1/10W,1%	2	R43, R149
.....3	102-7521	RES,CHIP,75 OHMS,1/10W,1%,SMD	2	R109, R110
.....3	102-8060	RES,CHIP,806 OHMS,1/10W,1%,SMD	1	R42
.....3	104-0634	RES,CHIP,634 OHMS,1%,1/10W,0805,SMD	2	R90, R96
.....3	104-1206	RES,CHIP,100 OHM,1%,1/4W,1206,SMD	1	R24
.....3	105-0013	RES,CHIP,13 OHM,5%,1W,SMD	3	R46, R47, R55
.....3	105-0051	RES, CHIP, 51 OHM, 1W, 5%, 2512	8	R59, R117, R119, R120, R121, R123, R129, R150
.....3	204-0242	DIODE, VARIABLE CAPACITANCE DUAL DIODE VARACTOR (NOTE)	1	D23
.....3	204-0914	DIODE,SWITCHING,MMBD914LT1,SMD	10	D6, D7, D8, D9, D10, D11, D12, D13, D14, D15
.....3	204-2800	DIODE,SCHOTTKY,HSMS-2800,SOT-23	4	D4, D5, D16, D17
.....3	210-0093	TRANSISTOR,BFR93A,SOT-23,SMD	1	Q10
.....3	210-0541	TSTR, NPN 90GHZ WIDEBAND, BFG541	1	Q2
.....3	210-4031	TSTR, BIPOLAR POWER, NPN, NJT4031N, SMD	1	Q1
.....3	210-7805	REG, 5V, 1A, 3 TERMINAL, POSITIVE VOLTAGE, SMD, D-PAK	1	U10
.....3	210-7806	REG, 6V, .5A, 3 TERMINAL, POSITIVE VOLTAGE, SMD, D-PAK	1	U11
.....3	216-0262	OPAMP,OP262,RAIL TO RAIL, SMD, 15MHZ BW, SOIC-8	1	U6

©2013 Broadcast Electronics

BOM LEVEL	PART NO.	DESCRIPTION	QTY	REF. DES.
.....3	216-0310	TSTR,MMBFU310LT1,SMD	1	Q9
.....3	216-0337	VR, LM337 NEGATIVE, SMD	1	U19
.....3	216-0393	IC, LM393M, DUAL VOLTAGE COMPARATOR, SMD	1	U2
.....3	216-1963	LINEAR TECH LT1963 1.5 AMP LDO ADJUSTABLE REGULATOR	1	U18
.....3	216-2222	TSTR, MMBT2222A, NPN, SMD	1	Q6
.....3	216-2564	IC, 64KBIT SPI SERIAL EEPROM, 25AA640A	1	U9
.....3	216-3306	IC, HIGH-PERFORMANCE, 16-BIT DIGITAL SIGNAL CONTROLLER	1	U7
.....3	216-3308	IC, ANALOG VOLUME CONTROL, 8-CH, 5V, LQFD-48, SMD	1	U3
.....3	216-3904	TSTR,MMBT3904LT1,NPN,SMD	1	Q8
.....3	216-5242	IC, ISOLATOR, DUAL CHANNEL DC/DC CONVERTER,ADUM5242	2	U12, U13
.....3	216-6002	IC, 3V LDO REGULATOR, SOT23 SMD	1	U14
.....3	216-7002	IC,MOSFET,2N7002LT1,SMD	4	Q3, Q4, Q5, Q7
.....3	216-7125	IC, NC7SZ125M5 Single Tristate Buffer SOT23	1	U8
.....3	216-8676	IC, AD8676ARMZ, DUAL, R-R OP AMP, SMD	5	U1, U4, U15, U20, U21
.....3	221-1105	MMIC,MSA-1105,17DBM,50 OHM	1	U17
.....3	221-4110	RF PLL FREQUENCY SYNTHESIZER	1	U5
.....3	224-2227	IC,LOW NOISE OP AMP,8 PIN,S0-8	2	U16, U24
.....3	320-0603	LED GREEN SMD	9	DS1, DS2, DS3, DS4, DS5, DS6, DS7, DS8, DS9
.....3	340-0004	SW,JUMPER PROGRAMMABLE	5	P2, P3, P5, P6, P10
.....3	366-0002	INDUCTOR,2.2UH,200MA,+/-5%	1	L11
.....3	366-0010-001	IND,10UH,1.5A	2	L1, L5
.....3	366-0011	IND,10UH,SHIELDED,SMD	1	L6
.....3	366-0043	IND,43NH,AIR,16MM,5%,SMD	1	L13
.....3	366-0100-005	IND, 100NH, CER WW, 0805, 5%, SMD	1	L2
.....3	366-0104	INDUCTOR, 100UH, 120MA, +/-5%	1	L10
.....3	366-0180	IND,180NH LAMINATED CER,0805,SMD	1	L4
.....3	366-0270	IND,270NH LAMINATED CER,0805,SMD	2	L3, L9
.....3	366-1000	INDUCTOR,100uH,20%,SMD	2	L7, L8
.....3	390-1945	XTAL, OSC, 19.456MHZ HCMOS, +/-25PPM, 7X5mm	1	Y2
.....3	391-0010	OSC, TCXO, 10MHZ, SMD	1	Y1
.....3	407-0500	EMI SHIELD, MODIFIED 50KE-CBSAFN-.75x1.5x.50	2	CAN1, CAN2
.....3	413-0603	Chip,Test Point 0603 SMD	1	TP1
.....3	413-1597	TERM,TURRET,2 SHLDR,.219,GOLD FLASH	1	TP3
.....3	417-0200	CONN,HEADER 20 PIN	3	J7, J8, J9
.....3	417-0308	CONN,JACK,3-PIN,SMD	4	J5, J6, J10, J21
.....3	417-3120	CONN, BNC RIGHT ANGLE DUAL PORT PCB MOUNT/SHIELDED	3	J1, J3, J12
.....3	418-0060	RECEPTACLE,XLR,3-PIN,FEMALE,RIGHT ANGLE,PCB MOUNT	3	J14, J15, J16
.....3	418-0255	CONN,MALE,4PIN	1	J17
.....3	418-2205	CONN, SOCKET, 2X20 SURFACE MOUNT, .050 PITCH, SFML LOCKING	1	J4

©2013 Broadcast Electronics

BOM LEVEL	PART NO.	DESCRIPTION	QTY	REF. DES.
.....3	418-5016	CONN, 16 PIN, MALE, SMT, 0.050, KEYED, WITH LATCHES"	1	J2
.....3	479-0175	SHIELD,1.5x1.75"x1.0",PC MOUNT"	1	CAN3
.....3	519-4000	PCB, EXCITER, STX LP	1	
....2	919-4030	ASSY, PCB, CONTROLLER, STX LP (SBCM)	1	
.....3	003-0105	CAP, CER, 1UF, 100V, 1812, 20%, SMD	3	C24, C26, C27
.....3	007-0010	CHIP CERAMIC 10pF 50V 5% 0603 SMD	12	C66, C67, C69, C94, C95, C96, C120, C121, C122, C123, C124, C206
.....3	007-0047-050	CAP, CER, 4.7UF, 10%, 50V, X7R, 1210, SMD	4	C145, C146, C153, C154
.....3	007-0100-035	CAP, LYTIC, 100UF, 35V, 20%, LOW IMP, SMD	4	C143, C144, C148, C155
.....3	007-1024-102	CAP, CER, 1000PF, 10%, 2000V, 1206, SMD	1	C11
.....3	007-1034-001	CAP,CER,.01UF,10%,50V,0603,SMD	45	C30, C31, C32, C33, C34, C35, C36, C37, C38, C39, C40, C72, C76, C166, C167, C168, C169, C170, C171, C172, C173, C174, C175, C176, C177, C178, C179, C180, C181, C182, C183, C184, C185, C186, C187, C188, C189, C190, C191, C192, C193, C194, C195, C196, C197
.....3	007-1034-010	CAP,CER,0.01UF,10V,10%,0402	42	C46, C47, C48, C49, C50, C51, C52, C53, C54, C55, C56, C57, C58, C59, C60, C61, C62, C63, C64, C83, C84, C89, C90, C91, C92, C107, C108, C113, C114, C134, C135, C198, C199, C200, C201, C202, C203, C204, C210, C211, C212, C213
.....3	007-1040-025	CAP,CER,.1UF,+80,-20%,25V,0603,SMD	104	C1, C2, C3, C4, C5, C7, C8, C9, C10, C12, C13, C14, C15, C17, C18, C19, C20, C21, C22, C23, C25, C28, C41, C42, C43, C44, C45, C65, C68, C70, C73, C77, C79, C80, C81, C82, C85, C86, C87, C88, C93, C97, C98, C99, C100, C101, C102,

©2013 Broadcast Electronics

BOM LEVEL	PART NO.	DESCRIPTION	QTY	REF. DES.
				C103, C104, C105, C106, C109, C110, C111, C112, C115, C116, C117, C118, C119, C125, C126, C127, C128, C129, C130, C131, C132, C133, C136, C137, C138, C139, C160, C161, C162, C163, C164, C165, C205, C207, C208, C209, C214, C215, C216, C217, C218, C219, C220, C221, C222, C223, C225, C226, C227, C228, C229, C230, C231, C232, C233, C234, C235
.....3	007-1054	CAP,CER,1uF,50V,10%,SMD	1	C29
.....3	007-1054-001	CAP,CER,1UF,10%,10V,X7R,0805,SMD	2	C71, C75
.....3	007-1075-100	CAP, CER CHIP, 10 UF, 10V, 1206	13	C6, C16, C140, C141, C142, C149, C150, C151, C152, C156, C157, C158, C159
.....3	013-0033	CAP, ULTRA HIGH LYTIC, .33F, 5V FOR POWER BACKUP	1	C224
.....3	064-2262	CAP,TANT,2.2uF,10V,SMD	2	C74, C78
.....3	070-1064	CAP,TANT,10uF,35V,20%,SMD	1	C147
.....3	102-0000	RES,CHIP,0 OHM,0805,SMD	22	R28, R66, R118, R120, R121, R126, R127, R129, R130, R233, R237, R239, R241, R242, R250, R253, R255, R256, R259, R260, R263, R264
.....3	102-0100	RES,CHIP,10.0 OHMS,1/10W,1%,SMD	7	R63, R64, R69, R72, R73, R76, R77
.....3	102-1000	RES,CHIP,100 OHMS,1/10W,1%,SMD	32	R3, R4, R19, R20, R60, R261, R270, R271, R272, R273, R274, R275, R276, R277, R278, R279, R280, R281, R282, R283, R284, R285, R286, R287, R288, R289, R290, R291, R292, R293, R294, R297
.....3	102-1001	RES,CHIP,1.00K OHMS,1/10W,1%,SMD	35	R5, R6, R7, R8, R21, R22, R23, R24,

©2013 Broadcast Electronics

BOM LEVEL	PART NO.	DESCRIPTION	QTY	REF. DES.
				R46, R47, R50, R52, R56, R59, R62, R68, R94, R116, R149, R150, R154, R157, R158, R182, R234, R235, R244, R245, R246, R247, R268, R269, R295, R296, R298
.....3	102-1002	RES,CHIP,10.0K OHMS,1/10W,1%,SMD	10	R117, R152, R153, R155, R156, R159, R183, R184, R186, R187
.....3	102-1004	RES,CHIP,1.00M OHMS,1/10W,1%,SMD	1	R123
.....3	102-2000	RES,CHIP,200 OHM,1/10 W,1% SMD	35	R9, R10, R11, R13, R25, R26, R27, R29, R34, R40, R78, R79, R148, R151, R166, R167, R168, R169, R170, R171, R172, R173, R174, R175, R176, R177, R178, R179, R180, R181, R206, R208, R214, R219, R222
.....3	102-2001	RES,CHIP,2.00K OHMS,1/10W,1%,SMD	45	R42, R43, R44, R45, R48, R49, R51, R55, R57, R61, R65, R67, R70, R74, R80, R82, R83, R85, R86, R88, R89, R91, R96, R98, R100, R102, R104, R106, R108, R110, R112, R188, R189, R190, R191, R192, R193, R196, R198, R199, R251, R257, R265, R266, R267
.....3	102-2151	RES, 2.15K, 1/10W, 1%, 0805	1	R204
.....3	102-2201	RES,CHIP,22.1 OHM,1/10W,1%	1	R147
.....3	102-2210	RES,CHIP,221 OHMS,1/10W,1%,SMD	1	R162
.....3	102-2341	RES,2.32K OHM,1/10W,1%	1	R39
.....3	102-2431	RES,CHIP,2.43K OHMS,1/10W,1%,SMD	9	R30, R31, R32, R114, R115, R124, R125, R238, R243
.....3	102-2490	RES,CHIP,24.9 OHM,1/10W,1%	1	R185
.....3	102-3160	RES,CHIP,3.16K OHMS,1/10W,1%,SMD	3	R211, R216, R218
.....3	102-4991	RES,CHIP,49.9 OHMS,1/10W,1%,SMD	4	R2, R18, R231, R232
.....3	102-5491	RES,CHIP,5.49K,1/10W,1%,SMD	1	R209
.....3	102-6040	RES,604 OHM,1/10W,1%	1	R221
.....3	102-7503	RES,750 OHM,1/10W,1%,SMD	4	R35, R36, R37, R38
.....3	102-9761	RES, CHIP, 9.76K OHMS, 1/8W, 1%, SMD 0805	1	R213

©2013 Broadcast Electronics

BOM LEVEL	PART NO.	DESCRIPTION	QTY	REF. DES.
.....3	104-0000	RES,CHIP,0 OHM JUMPER,0603,SMD	10	R1, R17, R33, R41, R163, R165, R203, R212, R229, R230
.....3	104-1001	RES,CHIP,1.0 K OHM,1%,1/16W,0603,SMD	15	R161, R194, R195, R200, R201, R202, R205, R207, R210, R215, R217, R220, R223, R248, R249
.....3	104-1002	RES,CHIP,10.0 K OHM,1%,1/16W,0603,SMD	1	R160
.....3	104-4702	RES,CHIP,47.5Kohm,1%,1/16W,0603,SMD	1	R164
.....3	199-0220	RES, NET, ISOLATED, 22 OHM, 5%, 1206, SMD	15	R132, R133, R134, R135, R136, R137, R138, R139, R140, R141, R142, R143, R144, R145, R146
.....3	201-0012-001	TRANSIENT VOLTAGE SUPPRESSION DIODE, 10v	1	D8
.....3	201-0012-002	TRANSIENT VOLTAGE SUPPRESSION DIODE, 6V	1	D9
.....3	204-0316	DIODE, HIGH SPEED, SOD323, SMD	1	D7
.....3	204-0914	DIODE,SWITCHING,MMBD914LT1,SMD	6	D1, D2, D3, D4, D5, D6
.....3	216-0016	IC, ALTERA EPCS16	1	U25
.....3	216-1326	IC,TRIPLE SUPPLY MONITORS,SOIC-8	1	U22
.....3	216-1963	LINEAR TECH LT1963 1.5 AMP LDO ADJUSTABLE REGULATOR	3	U42, U44, U45
.....3	216-2417	IC, REAL-TIME CLOCK (RTC) WITH SERIAL I/O, TSOC-6	1	U55
.....3	216-2541	IC, 4M, 2.7-3.6V 16BIT SERIAL FLASH MEMORY, JEDEC, SOIC-8	1	U24
.....3	216-2860	MICROCHIP ENC28J60 SPI ETHERNET	1	U5
.....3	216-3010	IC, ALTERA FPGA EP3C10F256	1	U19
.....3	216-3904	TSTR,MMBT3904LT1,NPN,SMD	1	Q5
.....3	216-5235	ANALOG DEVICES AD5235 DIGITAL POTS	3	U12, U18, U47
.....3	216-5241	ADI DUAL CHANNEL ISOLATORS W/POWER ADUM5241	14	U26, U27, U29, U30, U33, U34, U36, U37, U39, U40, U50, U51, U52, U53
.....3	216-5328	ANALOG DEVICES AD5328 8 CHAN DAC	1	U7
.....3	216-6549	IC, DUAL LVDS DIFFERENTIAL DRIVERS AND RECEIVERS, TSSOP16	5	U1, U2, U3, U4, U56
.....3	216-7002	IC,MOSFET,2N7002LT1,SMD	27	Q1, Q2, Q3, Q4, Q7, Q8, Q9, Q10, Q11, Q12, Q13, Q14, Q15, Q16, Q17, Q18, Q19, Q20, Q21, Q22, Q23, Q24, Q25, Q26, Q27, Q28, Q29
.....3	216-7400	IC,SN74AHCT1G00DBV,2-INPUT POS NAND,DBV,SMD	1	U14
.....3	216-7408	IC, MC74VHC1G08, AND GATE, CMOS, SMT	1	U17
.....3	216-7414-001	IC, SCHMITT TRIGGERED SINGLE GATE	13	U10, U13, U16, U46,

©2013 Broadcast Electronics

BOM LEVEL	PART NO.	DESCRIPTION	QTY	REF. DES.
		INVERTER,SC-70		U54, U57, U58, U59, U60, U61, U62, U63, U64
.....3	216-7490	ANALOG DEVICES AD7490 16 CHAN A/D	2	U6, U8
.....3	216-8574	IC, ADI AD8574 4CHANNEL R/R OP AMP	1	U15
.....3	224-2045	IC,DUAL,BUS TRANSCEIVER,SSOP-DCT8	7	U28, U31, U32, U35, U38, U48, U49
.....3	224-4000	GATE, SINGLE, XOR, 2 INPUT, 8NS TPD	1	U11
.....3	224-4832	IC,128MB,SDRAM,166MHz,86-PIN,TSOP	1	U21
.....3	227-0003	IC 3A PROGRAMMABLE DC-DC CONV SMT	2	U41, U43
.....3	229-3221	IC,RS 232 TRANSCEIVER +3V TO +5V 1uA SUPPLY-CURRENT	1	U23
.....3	231-0136	IC,VOLT REF,2.5V,8-PIN SOIC	1	D10
.....3	320-0603	LED GREEN SMD	10	DS1, DS2, DS5, DS6, DS7, DS8, DS9, DS10, DS11, DS12
.....3	325-0252	LED,RED/ORN,1206,SMD	1	DS4
.....3	325-0255	LED,BLUE, 0603, SMD	1	DS3
.....3	330-8055	FUSE, PTC RESETTABLE, .5A 6V, SMD	1	F2
.....3	339-0420	FILTER, ISOLATION MODULE 10BASE-T, SMD	1	T1
.....3	340-0004	SW,JUMPER PROGRAMMABLE	7	P1, P2, P3, P4, P5, P6, P7
.....3	342-3304-001	SW,TACT,SPST,N.O.,SMD,RAISED	1	SW1
.....3	360-0167	IND, .56 UH, 6A	2	L5, L8
.....3	366-0011	IND,10UH,SHIELDED,SMD	3	L4, L6, L7
.....3	366-3100	FERRITE, 600 OHMS, 1.5 AMP, 100MHz,1206 SMD	3	L1, L2, L3
.....3	390-2500	XTAL,OSC,25MHz,+3.3VDC,50PPM	1	U20
.....3	390-3276-006	XTAL, 32.768KHZ, 6PF, 20PPM, 8.7X3.7MM	1	Y1
.....3	408-1000	HEADER,10-PIN,.100 CENTERS,DIP,note	2	J6, J12
.....3	413-0603	Chip,Test Point 0603 SMD	39	TP1, TP2, TP3, TP4, TP5, TP6, TP7, TP8, TP9, TP10, TP11, TP12, TP13, TP14, TP15, TP16, TP17, TP18, TP19, TP20, TP21, TP22, TP23, TP24, TP26, TP27, TP28, TP29, TP30, TP31, TP32, TP33, TP34, TP35, TP37, TP38, TP39, TP40, TP41
.....3	413-1597	TERM,TURRET,2 SHLDR,.219,GOLD FLASH	1	TP25
.....3	417-0173	CONN,PCB,40-PIN,609-4037	1	J13
.....3	417-0308	CONN,JACK,3-PIN,SMD	8	J4, J5, J9, J11, J15, J17, J18, J19
.....3	417-0700	CONN,PCB MT,2PIN	1	J14
.....3	417-1517	CONN,HDR, 10-PIN SHROUDED PCB MT.	1	J16
.....3	418-2884	CONN, JACK, GANGED MOD WITH LED	3	J1, J2, J3

©2013 Broadcast Electronics

BOM LEVEL	PART NO.	DESCRIPTION	QTY	REF. DES.
.....3	418-5016	CONN, 16 PIN, MALE, SMT, 0.050, KEYED, WITH LATCHES"	1	J10
.....3	418-5026	CONN, 26 PIN, MALE, SMT, 0.050, KEYED, WITH LATCHES"	1	J7
.....3	418-5040	CONN, 40 PIN, MALE, SMT, 0.050, KEYED, WITH LATCHES"	1	J8
.....3	519-4030	PCB, CONTROLLER, STX LP	1	
....2	919-4060-100	ASSY, PCB, LPF/COUPLER, STX LP (SBCM)	1	
.....3	007-1024	CAP,CER,.001uF,50V,10%,SMD	4	C4, C6, C23, C24
.....3	007-1044	CAP,CER,0.1uF,50V,10%,SMD note	7	C2, C3, C7, C20, C21, C22, C25
.....3	007-1075-100	CAP, CER CHIP, 10 UF, 10V, 1206	2	C5, C19
.....3	007-4703	CAP, CER, 47pF, 50V, 5%, SMD	1	C1
.....3	007-5602-500	CAP,CER,56pF,50V,2%,SMD	1	C18
.....3	040-3312-005	CAP,MICA,RF,33PF,500V,5%,SMT	1	C12
.....3	046-0010-001	CAP,MICA,RF,10PF,500V,5%,SMT	2	C16, C17
.....3	046-0015	CAP, MICA, RF, 15PF, 500V, 5%, SMT	2	C8, C9
.....3	046-0027-001	CAP,MICA,RF,27PF,500V,5%,SMT	5	C10, C11, C13, C14, C15
.....3	101-0003	RES,THICK FILM,0 OHM,1/8W,5%,SMD	1	R35
.....3	101-1500	RES,THICK FILM,150,1/8W,SMD	2	R14, R18
.....3	101-3010	RES,CHIP,301 OHMS,1/8W,1%,SMD	2	R7, R8
.....3	102-1000	RES,CHIP,100 OHMS,1/10W,1%,SMD	2	R30, R31
.....3	102-1001	RES,CHIP,1.00K OHMS,1/10W,1%,SMD	4	R12, R16, R27, R32
.....3	102-1500	RES,CHIP,150 OHMS,1/10W,1%,SMD	2	R9, R10
.....3	102-2000	RES,CHIP,200 OHM,1/10 W,1% SMD	2	R15, R17
.....3	102-2001	RES,CHIP,2.00K OHMS,1/10W,1%,SMD	1	R34
.....3	102-3011	RES,CHIP,3.01K OHMS,1/10W,1%,SMD	1	R28
.....3	102-6409	RES,CHIP,64.9 OHMS,1/10W,1%,SMD	2	R11, R13
.....3	105-0036	RES, CHIP, 36 OHM, 1W, 5%, 2512	1	R21
.....3	105-0051	RES, CHIP, 51 OHM, 1W, 5%, 2512	1	R3
.....3	105-0150	RES, CHIP, 150 OHM, 1W, 5%, 2512	2	R5, R6
.....3	105-0200	RES, CHIP, 200 OHM, 1%, 1/2W, 2010, SMD	3	R22, R25, R26
.....3	105-0430	RES, CHIP, 432 OHM, 1%, 1/2W, 2010, SMD	2	R23, R24
.....3	105-1010	RES, CHIP, 100 OHM, 1W, 5%, 2512, SMD	2	R19, R20
.....3	111-0082	RES ,82.5 OHM, 1W, 1%, 2512, SMD	2	R1, R4
.....3	198-0101	TRMR,100 OHMS,TOP ADJUST,SMD	1	R2
.....3	198-0502	TRMR,5K,TOP ADJUST,SMD	2	R29, R33
.....3	216-0830	IC,OP AMP,OPA830,SOT23-5,R/R OUTPUT	2	U3, U4
.....3	221-8361	IC, TRUE AVERAGE POWER DETECTOR	2	U1, U2
.....3	360-4202	COIL,10 GA,3T,88nH (SBCM)	4	L1, L2, L3, L4
.....4	640-1001	WIRE, 10 GA, TIN PLATED	0.542	
.....3	360-4209	COIL,12 GA,8T,.375ID (SBCM)"	1	L7
.....4	640-1200	WIRE,12GA,MAGNET	0.019	
.....3	366-0100	IND,100NH LAMINATED CER,0805,SMD	2	L5, L6
.....3	407-0505	EMI SHIELD,LT-3334, .75 X 1.5 X .50	2	
.....3	418-5010	CONN, 10 PIN, MALE, SMT, 0.050, KEYED, WITH LATCHES"	1	J1
.....3	519-4060	PCB, LPF, STX LP	1	
.....3	610-0017	CABLE,RF OUTPUT,LOW PASS FILTER,STX	1	
.....3	949-4103	CABLE,RG316,8.0L,417-1318,STRIP (SBCM)	1	
.....4	417-1318	CONN, BNC 50 OHM BULKHEAD TO RG-316	1	

©2013 Broadcast Electronics

BOM LEVEL	PART NO.	DESCRIPTION	QTY	REF. DES.
.....4	621-1359	CBL,COAX,RG316/U,50 OHM	0.667	
....2	919-4070	ASSY, PCB, DISPLAY, STXLP (SBCM)	1	
.....3	007-1044	CAP,CER,0.1uF,50V,10%,SMD note	21	C1, C2, C3, C4, C5, C6, C7, C8, C9, C10, C11, C12, C13, C14, C15, C16, C17, C18, C19, C20, C21
.....3	102-1001	RES,CHIP,1.00K OHMS,1/10W,1%,SMD	5	R2, R3, R4, R5, R6
.....3	198-2004	TRMR,20K OHMS,TOP ADJ,SMD	1	R1
.....3	320-1624	DISPLAY, CHARACTER LCD, 16X2	1	LCD1
.....3	325-0807	LED,DUAL,SUPER RED/GRN,SMD,0807 (note)	7	DS1, DS2, DS3, DS4, DS5, DS6, DS7
.....3	340-0206	SWITCH, MOM, DPDT, CHROME CAP	5	SW1, SW2, SW3, SW4, SW5
.....3	417-0200	CONN,HEADER 20 PIN	1	J1
.....3	418-5040	CONN, 40 PIN, MALE, SMT, 0.050, KEYED, WITH LATCHES"	1	J2
.....3	440-0301	STANDOFF, 3/16 .060 SPACER"	4	HD1, HD2, HD3, HD4
.....3	519-4070	BLANK, PCB, DISPLAY, STXLP	1	
....2	919-4090-200	ASSY, PCB, STX LP, PS MOTHER BOARD (TECTROL)	1	
.....3	007-1034	CAP,CER,0.01uF,50V,10%,SMD	3	C2, C3, C4
.....3	102-1001	RES,CHIP,1.00K OHMS,1/10W,1%,SMD	1	R1
.....3	102-1691	RES,CHIP,1.69K OHMS,1/10W,1%,SMD	1	R3
.....3	102-4221	RES,CHIP,4.22K,1/10W,1%,SMD	1	R4
.....3	102-5041	RES,4.99K OHM,1/10W,1%	2	R2, R5
.....3	105-1001	RES,CHIP,1K OHM,1%,1/4W,1210,SMD	1	R6
.....3	204-2030	DIODE,SCHOTTKY,30V,1A,SMB	2	D1, D2
.....3	210-5680	IC, MOSFET N-CH, 60V, 8A, SO-8	2	Q5, Q6
.....3	216-0433	IC,OPTO PS2705-1,SMD	1	U2
.....3	216-7002	IC,MOSFET,2N7002LT1,SMD	4	Q1, Q2, Q3, Q4
.....3	221-0555	IC,TIMER,NE555D	1	U1
.....3	340-0004	SW,JUMPER PROGRAMMABLE	2	P7, P8
.....3	408-0300	HEADER,3-PIN,.100 CENTERS,SIP,note	2	J7, J8
.....3	417-0425	CONN,4-PIN,POWER-LOK	1	J3
.....3	417-0426	CONN,6-PIN,PCB MT,MALE,POWER	1	J5
.....3	417-0677	CONN,PCB MT,6PIN MALE	1	J2
.....3	417-0700	CONN,PCB MT,2PIN	1	J4
.....3	418-0900	CONN,9 PIN 640501-5 AMP	1	J6
.....3	418-2901	CONN, RA, FEMALE, POWER, 47 PIN POSITRONIC	1	J1
.....3	500-211	Screw,SEMS 4-40x3/8 Ph Pan Head MS Black Zinc (External)	2	
.....3	519-4090-200	PCB, MACH, STX LP, PS MOTHER BOARD (TECTROL)	1	
....2	949-0543	ASSY,CABLE,1PPS IN/OUT,FSi/ASi (SBCM)	1	
.....3	402-0051	TY-RAP, W/FLAG	1	
.....3	418-0034	PLUG,BNC DUAL CRIMP 1-227079-6	2	
.....3	621-1359	CBL,COAX,RG316/U,50 OHM	0.333	
....2	949-4100	CABLE,40 RIB,5.25 LG,D MALE-HDR (SBCM)	1	
.....3	417-2819-001	CONN, 37 PIN, MALE, HDF,D-SUB, W/THREADED INSERTS	1	

©2013 Broadcast Electronics

BOM LEVEL	PART NO.	DESCRIPTION	QTY	REF. DES.
.....3	418-4001	CONN,RIBBON CBL,40COND	1	
.....3	600-0040	CBL,40COND,28GA,100 ANSLEY	0.5	
....2	949-4101-100	CABLE,12GA BLUE,6 LG,STRIP-PUSH ON (SBCM)	1	
.....3	410-0050	LUG,TERM,10-12GA,FEMSPADE	1	
.....3	601-1202-006	WIRE,AWG 12,STRANDED,LIGHT BLUE	0.5	
.....3	611-3750	TUB,HT SHK,3/8	0.104	
....2	949-4101-200	CABLE,12GA BROWN,6 LG,STRIP-PUSH ON (SBCM)	1	
.....3	410-0050	LUG,TERM,10-12GA,FEMSPADE	1	
.....3	601-1202-001	WIRE,AWG 12,STRANDED,BROWN	0.5	
.....3	611-3750	TUB,HT SHK,3/8	0.104	
....2	949-4101-401	HARNESS,DC POWER TO PA,STX1K (SBCM)	1	
.....3	402-0051	TY-RAP, W/FLAG	3	
.....3	417-0372	CONTACT,CONN,FC112N2	12	
.....3	418-0426	CONN,6-PIN,FEMALE,POWER,CABLE	2	
.....3	601-1200	WIRE,AWG12 19/25 BLK	3.75	
.....3	601-1202	WIRE,AWG12 19/25 RED	3.75	
....2	949-4101-403	HARNESS,AC INPUT TO SMALL PS's,STX1K (SBCM)	1	
.....3	402-0051	TY-RAP, W/FLAG	2	
.....3	410-2478	CRIMP TERMINAL,AMP 640707-1	6	
.....3	417-0053	SKT,CONN 641294-1 AMP	2	
.....3	417-0306	HSNG,3 POS,SL-156	3	
.....3	418-0701	CONN,HOUSING,2 PIN	1	
.....3	601-2209	WIRE,AWG22,7/30 WHT	3.167	
....2	949-4101-404	HARNESS,DC POWER TO CONTROLLER & EXCITER,STX1K (SBCM)	1	
.....3	402-0051	TY-RAP, W/FLAG	4	
.....3	410-2478	CRIMP TERMINAL,AMP 640707-1	6	
.....3	417-0053	SKT,CONN 641294-1 AMP	6	
.....3	417-0606	HSNG,6 POS,SL-156	1	
.....3	418-0240	PLUG,FEM,4PIN	1	
.....3	418-0701	CONN,HOUSING,2 PIN	1	
.....3	601-2209	WIRE,AWG22,7/30 WHT	12.833	
....2	949-4101-406	HARNESS,DC POWER,FAN,IPA,PS CONTROL (SBCM)	1	
.....3	402-0051	TY-RAP, W/FLAG	1	
.....3	410-2478	CRIMP TERMINAL,AMP 640707-1	8	
.....3	417-0053	SKT,CONN 641294-1 AMP	17	
.....3	417-0059	CONN,9 PIN 1-640521-0 AMP	1	
.....3	417-0606	HSNG,6 POS,SL-156	1	
.....3	417-2816	PIN, CRIMP .100,22-24 GA"	8	
.....3	417-2820	CONN, 8 PIN, .100 LOCKING HOUSING"	1	
.....3	417-4025	HOUSING,4-PIN,AMP 640250-4	1	
.....3	418-0240	PLUG,FEM,4PIN	1	
.....3	418-0670	HOUSING,CONN,6PIN FEM	1	
.....3	601-2209	WIRE,AWG22,7/30 WHT	22.896	
....2	949-4101-407	HARNESS, AC INPUT,STX WITH TECTROL PS (SBCM)	1	
.....3	402-0051	TY-RAP, W/FLAG	1	
.....3	410-0015	LUG,TERM #8 RING CRIMP 12-10	2	

©2013 Broadcast Electronics

BOM LEVEL	PART NO.	DESCRIPTION	QTY	REF. DES.
.....3	410-0050	LUG,TERM,10-12GA,FEMSPADE	2	
.....3	417-0372	CONTACT,CONN,FC112N2	3	
.....3	417-0420	CONN, FEM, 4 POSITION, POWER-LOK, WIRE	1	
.....3	601-1202-001	WIRE,AWG 12,STRANDED,BROWN	1.541	
.....3	601-1202-006	WIRE,AWG 12,STRANDED,LIGHT BLUE	1.541	
.....3	601-1202-054	WIRE,AWG 12,STRANDED, GREEN/YELLOW	2.208	
.....3	611-3750	TUB,HT SHK,3/8	0.208	
....2	949-4102	CABLE,RG316,20.0L,417-1318,417-8030(SBCM)	1	
.....3	417-1318	CONN, BNC 50 OHM BULKHEAD TO RG-316	1	
.....3	417-8030	CONN,PLUG,RT ANG,SMA,HEX CRIMP	1	
.....3	621-1359	CBL,COAX,RG316/U,50 OHM	1.667	
....2	959-4101	ASSY PA, COMB, HSINK, STX	1	
.....3	471-4040	PLATE,ALUM BACKER,LUMP COMBINER,STX LP	1	
.....3	500-211	Screw,SEMS 4-40x3/8 Ph Pan Head MS Black Zinc (External)	11	
.....3	919-4040	ASSY, PCB, COMBINER, STX LP	1	
.....4	046-0022	CAP,MICA,RF,22PF	4	C1, C5, C13, C11
.....4	046-0022-001	CAP,MICA,RF,22PF,500V,5%,SMT	6	C3, C6, C8, C9, C14, C16
.....4	046-0024-001	CAP,MICA,RF,24PF,500V,5%,SMT	2	C4, C10
.....4	131-1004	RES,100 OHM,5%,250W,FLANGED	2	R102, R112
.....4	131-1123	RES,100 OHM,5%,400W,FLANGED	1	R110
.....4	241-120	CAPACITOR, UNCASED MICA 12PF 5% FWM602	4	C2, C12, C7, C15
.....4	360-4200	COIL,10 GA,4T,95nH,CLOCKWISE WHILE RECEDING (SBCM)	3	L3, L5, L6
.....5	640-1001	WIRE, 10 GA, TIN PLATED	0.667	
.....4	360-4201	COIL,10 GA,4T,95nH,COUNTER-CLOCKWISE WHILE RECEDING (SBCM)	3	L1, L2, L4
.....5	640-1001	WIRE, 10 GA, TIN PLATED	0.667	
.....4	519-4040	PCB, COMBINER, STX LP	1	
.....3	959-4101-001	STX,PA SUB ASSMBLY,1KW	1	
.....4	210-2932	TSTR, RF POWER, SD2932 (note)	4	Q1, Q2, Q3, Q4
.....4	210-8535	TSTR, RF POWER, PD85035C	1	Q8
.....4	370-0069-001	ASSY COIL, STX PA (SBCM)	4	L16, L17, L19, 20
.....5	610-2401	WIRE,TEFLON,18 AWG,600V,200C	0.21	
.....4	420-4306	SCREW,4-40X.375,S.S. SHCS	10	
.....4	423-4001	#4 FLAT SS .250 X .125 X .018	8	
.....4	423-4002	#4 LOCK S.S. SPLIT	10	
.....4	455-4000-200	HEATSINK,WIDE,STX 1KW	1	
.....4	471-4224	PLATE,SPACER,PD85035C TRANSISTOR,STX LP IPA	1	
.....4	500-211	Screw,SEMS 4-40x3/8 Ph Pan Head MS Black Zinc (External)	16	
.....4	519-4055	PCB, SUB-BOARD, PA, STX LP	1	
.....4	594-0019	LABEL,DANGER HV 1X 1.5	1	
.....4	594-0099	LABEL,WARNING HIGH CURRENT",1" X 1.5",VINYL,ADHESIVE BACKED"	1	
.....4	919-4050	ASSY, PCB, PA, STX LP (SBCM)	1	
.....5	003-0105	CAP, CER, 1UF, 100V, 1812, 20%, SMD	2	C30, C211

©2013 Broadcast Electronics

BOM LEVEL	PART NO.	DESCRIPTION	QTY	REF. DES.
.....5	006-1006	CAP,47 uF,Electrolytic,63V,SMD (NOTE)	8	C167, C178, C207, C209, C235, C236, C237, C238
.....5	006-1075	CAP,LYTIC,10uF,50V,20%,SMD note	2	C37, C38
.....5	006-1075-350	CAP,LYTIC,10uF,35V,20%,NP,SMD	8	C64, C67, C74, C122, C137, C140, C190, C200
.....5	006-1085	CAP,ELECTRO,100 UF,10%,35V,SMD	2	C15, C21
.....5	007-0020-006	CAP,20pF,5%,50v,SMD,0603	1	C82
.....5	007-0100-035	CAP, LYTIC, 100UF, 35V, 20%, LOW IMP, SMD	2	C228, C229
.....5	007-0227	CAP,LYTIC,220UF,35V,SMT,LOW ESR	2	C231, C232
.....5	007-1024	CAP,CER,.001uF,50V,10%,SMD	23	C3, C4, C7, C11, C14, C22, C24, C33, C34, C36, C40, C41, C49, C50, C56, C69, C70, C131, C150, C154, C155, C161, C198
.....5	007-1034	CAP,CER,0.01uF,50V,10%,SMD	1	C45
.....5	007-1044	CAP,CER,0.1uF,50V,10%,SMD note	54	C1, C2, C5, C6, C8, C9, C10, C12, C13, C18, C23, C25, C27, C29, C31, C39, C43, C44, C46, C48, C52, C54, C55, C58, C61, C63, C65, C66, C73, C86, C109, C110, C111, C114, C115, C123, C124, C129, C134, C135, C153, C166, C168, C171, C174, C175, C176, C199, C206,
.....5	007-1044-200	CAP, CHIP, .1UF, 200V, 20%, SMD	8	C26, C28, C32, C35, C47, C51, C59, C62
.....5	007-1054	CAP,CER,1uF,50V,10%,SMD	2	C17, C19
.....5	007-1075-100	CAP, CER CHIP, 10 UF, 10V, 1206	1	C113
.....5	007-2202-050	CAP,CER,22 PFD,5%,50V,1206,SMD	1	C118
.....5	007-3912	CAP,CER,39pF,50V,5%,SMD	1	C117
.....5	007-3923	CAP,CER,390pF,100V,5%,SMD	1	C20
.....5	007-4724	CAP,CER,0.047uF,50V,10%,SMD	4	C42, C53, C57, C71
.....5	009-1013	CAP,CER CHIP,10PF,500V,5%	4	C98, C99, C188, C193
.....5	009-1023	CAP,CER CHIP,100PF,500V,5%	8	C90, C93, C97, C169, C170, C173, C186, C187
.....5	009-1032-050	CAP,CER CHIP,1000PF,50V,5%	9	C72, C77, C84, C85, C88, C126, C133, C158, C159
.....5	009-1033	CAP,CER CHIP,1000PF,500V,5%	7	C233, C234, C239, C246, C247, C248, C249
.....5	009-1223	CAP,CER CHIP,120PF,300V,5%	1	C149

©2013 Broadcast Electronics

BOM LEVEL	PART NO.	DESCRIPTION	QTY	REF. DES.
.....5	009-1813	CAP,CER CHIP,18 PF,5%,500V	6	C212, C213, C216, C217, C226, C227
.....5	009-1823	CAP,CER CHIP,180PF,300V,5%	1	C138
.....5	009-2023	CAP,CER CHIP,200PF,300V,5%	2	C139, C177
.....5	009-2723	CAP,CER CHIP,270PF,300V,5%	8	C92, C95, C103, C119, C183, C184, C197, C201
.....5	009-3013	CAP,CER CHIP,30PF,500V,5%	1	C68
.....5	009-3913	CAP, CER CHIP, 39PF, 500V, 5%	9	C79, C81, C94, C162, C164, C165, C215, C240, C241
.....5	009-4723	CAP,CER CHIP,470PF,200V,5%	28	C75, C76, C78, C80, C83, C87, C89, C91, C96, C102, C106, C128, C141, C142, C144, C145, C146, C147, C151, C152, C156, C157, C160, C163, C191, C220, C224, C225
.....5	009-5613	CAP,CER CHIP,56PF,500V,5%	1	C148
.....5	009-6813	CAP,CER CHIP,68PF,500V,5%	5	C107, C120, C136, C202, C203
.....5	009-8013	CAP,CER CHIP,82PF,500V,5%	4	C108, C127, C222, C223
.....5	020-4785	CAP,LYTIC,470UF,100V,20%,STDUP	4	C242, C243, C244, C245
.....5	046-1030	CAP,METAL FEED,1000PF,350V,10%	4	C100, C112, C189, C192
.....5	070-2265-L25	CAP,TANT,22 MFD,20%,25V, E CASE,LOW ESR,SMD	1	C16
.....5	090-0004	CAP,TRMR,CER,4-25PF,SMD,NPO	8	C104, C105, C121, C125, C204, C205, C214, C218
.....5	090-5010	CAP,TRIM,MONO CERAMIC,6-50pF,50V	4	C101, C116, C194, C195
.....5	102-0000	RES,CHIP,0 OHM,0805,SMD	5	R56, R117, R126, R133, R155
.....5	102-1000	RES,CHIP,100 OHMS,1/10W,1%,SMD	13	R1, R6, R10, R11, R17, R18, R54, R71, R87, R102, R110, R148, R268
.....5	102-1001	RES,CHIP,1.00K OHMS,1/10W,1%,SMD	18	R14, R26, R33, R37, R44, R48, R62, R68, R69, R79, R85, R99, R118, R147, R153, R198, R199, R222
.....5	102-1002	RES,CHIP,10.0K OHMS,1/10W,1%,SMD	31	R3, R8, R16, R22, R24, R34, R38, R41, R50, R51, R52, R55, R59, R75, R76, R78, R82, R88, R89, R92, R100, R103, R111,

©2013 Broadcast Electronics

BOM LEVEL	PART NO.	DESCRIPTION	QTY	REF. DES.
				R116, R119, R138, R175, R242, R243, R245, R250
.....5	102-1003	RES,CHIP,100K OHMS,1/10W,1%,SMD	15	R27, R30, R39, R45, R49, R64, R70, R86, R105, R112, R190, R191, R212, R221, R224
.....5	102-1004	RES,CHIP,1.00M OHMS,1/10W,1%,SMD	1	R241
.....5	102-1214	RES, CHIP, 1.21K OHM, 1/10W, 1%	2	R5, R9
.....5	102-1331	RES,CHIP,1.33K OHMS,1/10W,1%,SMD	5	R25, R36, R43, R61, R84
.....5	102-1500	RES,CHIP,150 OHMS,1/10W,1%,SMD	1	R254
.....5	102-1501	RES,1.50K OHM,1/10W,1%	1	R13
.....5	102-1503	RES,CHIP,150K OHMS,1/10W,1%,SMD	3	R74, R104, R223
.....5	102-1553	RES,CHIP,15.0K OHMS,1/10W,1%,SMD	1	R247
.....5	102-2212	RES,CHIP,22.1K OHMS,1/10W,1%,SMD	2	R80, R200
.....5	102-2214	RES,CHIP,2.21K OHM,1/10W,1%	2	R2, R12
.....5	102-2273	RES,CHIP,2.2M OHM,1/10 W,5%	1	R73
.....5	102-2430	RES,CHIP,243 OHMS,1/10W,1%,SMD, 0805	1	R63
.....5	102-2492	RES,CHIP,24.9K OHMS,1/10W,1%,SMD	4	R31, R46, R65, R90
.....5	102-2741	RES,CHIP,2.74K OHMS,1/10W,1%,SMD	4	R35, R53, R77, R255
.....5	102-3001	RES,CHIP,30.1 OHMS,1/10W,1%,SMD	1	R156
.....5	102-3011	RES,CHIP,3.01K OHMS,1/10W,1%,SMD	1	R151
.....5	102-3162	RES,CHIP,31.6 K,1/10 W, 1%	4	R40, R58, R81, R95
.....5	102-3320	RES,CHIP,332 OHMS,1/10W,1%,SMD	7	R109, R113, R195, R210, R217, R220, R238
.....5	102-3323	RES,CHIP,332K OHMS,1/10W,1%,SMD	1	R211
.....5	102-4321	RES,CHIP,4.32K OHMS,1/10W,1%,SMD	2	R4, R7
.....5	102-4532	RES,CHIP,45.3K OHMS,1/10W,1%,SMD	1	R19
.....5	102-4992	RES,49.9K OHMS,1/10W,1%,SMD	10	R93, R94, R120, R122, R123, R124, R127, R139, R140, R166
.....5	102-4993	RES,CHIP,499K OHMS,1/10W,1%,SMD	4	R42, R60, R83, R96
.....5	102-5041	RES,4.99K OHM,1/10W,1%	1	R20
.....5	102-5110	RES,CHIP,511 OHMS,1/10W,1%,SMD	6	R72, R192, R193, R194, R196, R197
.....5	102-6409	RES,CHIP,64.9 OHMS,1/10W,1%,SMD	1	R152
.....5	102-7150	RES,CHIP,715 OHMS,1/10W,1%,SMD	1	R66
.....5	102-8164	RES, CHIP, 8.66K OHM, 1/10W, 1% ,CR21-8661F-T	1	R23
.....5	102-8252	RES,82.5K OHM,1/10W,1%	1	R57
.....5	104-0000	RES,CHIP,0 OHM JUMPER,0603,SMD	6	R177, R179, R181, R183, R185, R187
.....5	105-0003	RES .30 OHM 1/2W 1% 2010 SMD	1	R29
.....5	105-0010	RES, CHIP, 10 OHM, 1W, 1%, 2512	1	R129
.....5	105-0043	RES,CHIP,43 OHM,5%,1W,SMD	2	R164, R169
.....5	105-0102	RES, CHIP, 1K OHM, 1W, 5%, 2512	4	R21, R173, R174, R270

©2013 Broadcast Electronics

BOM LEVEL	PART NO.	DESCRIPTION	QTY	REF. DES.
.....5	105-0294	RES,CHIP,294 OHM,1W,1%,2512,SMD	1	R134
.....5	105-0430	RES, CHIP, 432 OHM, 1%, 1/2W, 2010, SMD	2	R135, R136
.....5	111-0006	RES .01 OHM 3W CURRENT SENSE, SMT	4	R28, R32, R47, R67
.....5	111-0040-003	RES .04 OHM 3W CURRENT SENSE, SMT	1	R15
.....5	111-2223	RES,CHIP,22 OHM,1W,5%	26	R97, R98, R101, R106, R107, R108, R125, R128, R130, R131, R132, R141, R142, R143, R144, R145, R146, R149, R154, R158, R160, R162, R163, R165, R168, R269
.....5	131-7031	RES,100 OHM,5%,10W,SMT	2	R157, R189
.....5	131-7031-020	RES, 100 OHM, 5%, 20W, SMT	1	R188
.....5	198-0503	TRMR,50K,TOP ADJUST,SMD	4	R91, R114, R115, R137
.....5	198-1054	TRMR,10K OHMS,TOP ADJ,SMD (N)	2	R121, R159
.....5	204-0130	SCHOTTKY BARRIER RECTIFIER 1 AMP 30V CASE 403A SMD	1	D10
.....5	204-0914	DIODE,SWITCHING,MMBD914LT1,SMD	54	D1, D2, D3, D5, D7, D8, D11, D13, D14, D15, D17, D18, D19, D20, D21, D22, D23, D25, D26, D27, D28, D29, D30, D31, D32, D33, D34, D36, D37, D38, D39, D40, D41, D42, D43, D44, D45, D47, D50, D51, D53, D54, D55, D56, D57, D59, D61, D62, D63, D67, D68, D69, D70
.....5	210-0084	TSTR, MOSFET, P CHNL, 130MA, 50V, 10 OHM, SMD	1	Q5
.....5	210-1047	DIODE,ZENER,4.7V,225MW,SMD,SOT23	6	D48, D49, D52, D58, D64, D66
.....5	210-5500	TSTR, RF POWER, PD55003-E	1	Q12
.....5	216-0830	IC,OP AMP,OPA830,SOT23-5,R/R OUTPUT	8	U1, U3, U5, U7, U12, U14, U22, U30
.....5	216-1490	IC,OP AMP,LT1490,DUAL,R/R I/O,SMT	6	U6, U11, U15, U20, U26, U34
.....5	216-2011	IC,CURRENT MONITOR,60V,G=10,SOT23-5	6	U4, U10, U18, U19, U21, U25
.....5	216-4013	IC,MC14013BD DUAL D FLIP FLOP,SMD	1	U17
.....5	216-7002	IC,MOSFET,2N7002LT1,SMD	10	Q6, Q7, Q9, Q10, Q11, Q13, Q14, Q16, Q17, Q20
.....5	216-7408	IC, MC74VHC1G08, AND GATE, CMOS, SMT	1	U23
.....5	220-0035	IC,LM35DZ CELSIUS TEMP SENSOR	2	U2, U8
.....5	220-7425	IC, COMPARATOR, LMV7219, 7NS, 2.5-5V, R-R	3	U16, U24, U40
.....5	221-0072-A	AMP,OP,LOW NOISE,SOIC8	1	U29

©2013 Broadcast Electronics

BOM LEVEL	PART NO.	DESCRIPTION	QTY	REF. DES.
.....5	221-8361	IC, TRUE AVERAGE POWER DETECTOR	1	U32
.....5	224-1491	IC,OP AMP,QUAD,RAIL TO RAIL,SMD	1	U27
.....5	227-1576	VR, LT1576IS8, SWITCHER, 1.5A, SMD	1	U9
.....5	231-3170	VR,LM317,SMD	1	U13
.....5	320-0603	LED GREEN SMD	3	DS7, DS10, DS12
.....5	325-0252	LED,RED/ORN,1206,SMD	4	DS1, DS2, DS6, DS32
.....5	330-0009	FUSE,10A,2014,FAST-ACTING	1	F5
.....5	330-0062	FUSE, SMD, 20A, 125V	4	F1, F2, F3, F4
.....5	340-0004	SW,JUMPER PROGRAMMABLE	7	P1, P2, P3, P5, P6, P9, P10
.....5	350-197	INDUCTOR, SMT, POWER, 1uH	2	L2, L3
.....5	350-200	INDUCTOR, SMT, 1812, 56NH	1	L26
.....5	350-202	IND, SMT, 1812, 39 NH	1	L38
.....5	360-0125	IND, 68 UH, 1.5A, SMD	1	L1
.....5	360-4203	COIL,16 GA,4T,47nH (SBCM)	1	L29
.....6	601-0016	WIRE AWG16, BUSS	0.333	
.....5	360-4204	COIL,16 GA,2T,18nH (SBCM)	1	L31
.....6	601-0016	WIRE AWG16, BUSS	0.208	
.....5	360-4205	COIL,16 GA,1T,5nH (SBCM)	1	L30
.....6	601-0016	WIRE AWG16, BUSS	0.104	
.....5	360-4208	WIRE,POWER DIST,PA,STX LP(SBCM)	1	W1
.....6	640-1001	WIRE, 10 GA, TIN PLATED	0.792	
.....5	366-0010-001	IND,10UH,1.5A	3	L6, L7, L27
.....5	366-0022-001	IND, 22 NH, AIR, 16 MM, 5%, SMD	5	L18, L21, L22, L24, L39
.....5	366-0068-100	IND, 68NH, AIR, 5%, SMD, B10J	1	L15
.....5	366-0100	IND,100NH LAMINATED CER,0805,SMD	1	L23
.....5	366-0111	INDUCTOR,SMD,AIR CORE,10T,111NH,5%	1	L28
.....5	366-0126	INDUCTOR,SMD,AIR CORE,11T,130nH	6	L32, L33, L34, L35, L36, L37
.....5	366-0130	INDUCTOR,POWER,SMD,1uH,10A	2	L25, L40
.....5	366-0380	IND,380NH,AIR CORE,SMT	1	L8
.....5	366-6152	FERRITE,CHIP IMPEDANCE 1500OHMS @ 100MHZ MULTILAYER, 0805	8	L4, L5, L9, L10, L11, L12, L13, L14
.....5	370-0062	ASSY,FM-10S,XFMR,RF AMP OUTPUT (SBCM)	4	T1, T4, T7, T8
.....6	463-0126	TUBING,COPPER,1/8X.014X1.530	4	
.....6	610-2401	WIRE,TEFLON,18 AWG,600V,200C	0.8	
.....5	370-0063	ASSY,FM-10S,XFMR,RF AMP INPUT (SBCM)	4	T2, T3, T5, T6
.....6	610-2401	WIRE,TEFLON,18 AWG,600V,200C	0.22	
.....5	407-0501	EMI SHIELD, MODIFIED 50KE-CBSAFN-2.5x3.25x.50	1	
.....5	408-0300	HEADER,3-PIN,.100 CENTERS,SIP,note	1	J7
.....5	413-0603	Chip,Test Point 0603 SMD	7	TP24, TP25, TP26, TP27, TP28, TP29, TP30
.....5	413-1206	CHIP,TEST POINT,1206,SMD	23	TP1, TP2, TP3, TP4, TP5, TP6, TP7, TP8, TP9, TP10, TP11, TP12, TP13, TP14, TP15, TP16, TP17,

©2013 Broadcast Electronics

BOM LEVEL	PART NO.	DESCRIPTION	QTY	REF. DES.
				TP18, TP19, TP20, TP21, TP22, TP23
.....5	417-0426	CONN,6-PIN,PCB MT,MALE,POWER	1	J1
.....5	417-0701	CONN,SMA FEMALE PC MOUNT	1	J11
.....5	417-1041	HDR,4PIN,SINGLE ROW,SMT,0.1SP	6	J3, J5, J6, J8, J9, J10
.....5	417-4568	CONN HEADER VERT 8POS .100 TIN	1	J4
.....5	418-451	Diode, SMT, Zener, 5.1V Motorola BZX84C5V1LT1	1	D12
.....5	418-5010	CONN, 10 PIN, MALE, SMT, 0.050, KEYED, WITH LATCHES"	2	J12, J13
.....5	418-5026	CONN, 26 PIN, MALE, SMT, 0.050, KEYED, WITH LATCHES"	1	J2
.....5	463-0127	TUBING,COPPER,1/8X.014X1.300	4	
.....5	519-4050	PCB, PA, STX LP	1	
....2	959-4102-380	ASSY,FAN,STX WITH TECTROL PS	1	
.....3	380-6307	FINGER GUARD,FAN,4.125 CENTERS	2	
.....3	380-9007-001	FAN,LUGGED,AXIAL,12V,120MM X 38MM,3600RPM	2	
.....4	380-9007	FAN,12V,120MM X 38MM,3600RPM	1	
.....4	417-0036	PIN CONN,AMP,350967-1	2	
.....3	400-0207	STRIP,QUIET SHIELD,.250x.375""	1.688	
.....3	418-0233	HSNG,CONN, 4P,1-640509-AMP	1	
.....3	420-6108	SCREW,6-32X.500,S.S. PH	8	
.....3	421-6008	6-32 KEP NUT	8	
.....3	471-4201-200	PANEL,FAN MOUNTING,STX LP	1	

©2013 Broadcast Electronics

BOM LEVEL	PART NO.	DESCRIPTION	QTY	REF. DES.
0	959-4112	ASSY,FM,STX LP,1KW,ADD ON UNIT		
..1	400-0207	STRIP,QUIET SHIELD,.250x.375""	7.083	
..1	420-6606	SCREW,6-32X.375,S.S. PH FH UC	9	
..1	421-6020	6-32 THUMB NUT	1	
..1	422-6106	SCREW,SEMS 6-32 X 3/8 PAN PH. ST."	3	
..1	469-0366	FINGER STOCK (NOTE!!!!!)	0.111	
..1	469-5500	FINGER STOCK,TECH-ETCH 250P37-16-02	0.833	
..1	471-4205-100	COVER WELDMENT,STX LP,NEW PS	1	
..1	471-4209-200	COVER,NEW PS,STX LP	1	
..1	471-4225	SAFETY SHIELD FOR ELECTRICAL SOURCE STX LP	1	
..1	594-0019	LABEL,DANGER HV 1X 1.5	1	
..1	594-0505	LABEL, WARNING-ONLY AUTHORIZED PERSONNEL	1	
..1	959-4112T	ASSY,FM,STX LP,1KW,ADD ON UNIT,BASIC TEST	1	
....2	324-2500	LIGHTPIPE,0.197 DIA,0.5 LONG, PANEL MT.	4	
....2	349-0020	SWITCH, ROCKER, DPST, 20A	1	
....2	400-0207	STRIP,QUIET SHIELD,.250x.375""	6	
....2	409-0126	CARD GUIDE,4.5 LG	2	
....2	411-7086	TERM BLK FEED-THRU 1-4MM GRAY	2	
....2	411-7866	TERM BLK,FEED-THRU,1-4MM GRN/YEL	1	
....2	420-4124	SCREW,4-40X1.500,S.S. PH	6	
....2	420-6114	SCREW,6-32X.875,S.S. PH	4	
....2	420-9720	RETAINER,NUT,OD:0.26,FITS SHAFT 5/32""	4	
....2	421-4008	4-40 KEP NUT	4	
....2	421-6008	6-32 KEP NUT	3	
....2	422-0110	SCREW,10-32 X 5/8,PPH,SEM,STEEL,ZINC PLATING"	6	
....2	422-6106	SCREW,SEMS 6-32 X 3/8 PAN PH. ST."	8	
....2	423-4002	#4 LOCK S.S. SPLIT	7	
....2	423-6002	#6 LOCK SPLIT	4	
....2	441-0184	STOFF,6-32,MALE-FEMALE,3/8	1	
....2	441-4513	STOFF,SS,3/16 HEX X 1" LONG, MALE-FEMALE 440"	1	
....2	467-0001	EXTRUSION,RUBBER	0.063	
....2	469-0022	FINGER STOCK,LAIRD 97-654,12 LONG"	2	
....2	471-4200-300	WELDMENT,CHASSIS,STX 1KW,NEW PS	1	
....2	471-4201-100	PLENUM, FAN, STX LP	1	
....2	471-4208	FRONT PANEL, STX LP, ADD ON UNIT, SCREENED	1	
....2	471-4212	COVER,PA,STX LP	1	
....2	471-4218-100	REAR FILLER PANEL,NEW PS STX PA	1	
....2	471-4260-100	RETAINER,NEW PS,STX LP	1	
....2	471-4262	SPACER PLATE,LPT,STX 1K	1	
....2	471-4264	GUARD,STX NEW PS	1	
....2	486-7150	HANDLE, 4 X 1.375", BRASS, CHROME PLATED, #10-32 THREADS"	2	
....2	500-211	Screw,SEMS 4-40x3/8 Ph Pan Head MS Black Zinc (External)	8	
....2	510-246	Flexible Grommet, (NOTE)	0.213	
....2	540-0016-007	PWR SPLY,PFC 53VDC,2KW, TECTROL	1	

©2013 Broadcast Electronics

BOM LEVEL	PART NO.	DESCRIPTION	QTY	REF. DES.
....2	540-1012-100	POWER SUPPLY, 12V 65W AC/DC CONVERTER 2X4" STX LP"	1	
....2	540-1012-501	POWER SUPPLY 12V 80/100W AC/DC 2X4IN	1	
....2	594-0073	LABEL,WARNING ROTATING FANS	1	
....2	594-0503	LABEL, DANGER-HAZARDOUS VOLTAGE	1	
....2	594-0505	LABEL, WARNING-ONLY AUTHORIZED PERSONNEL	1	
....2	640-1001	WIRE, 10 GA, TIN PLATED	0.25	
....2	700-0089	TAPE,POLYMER,3/4 (54FT ROLLS)	0.012	
....2	849-2010	CBL,ASSY,.050 DOUBLE ROW 10 PIN FEMALE IDC ASSEMBLY,2 INCH	1	
....2	849-2010-100	CBL,ASSY,.050 DOUBLE ROW 10 PIN FEMALE IDC ASSEMBLY,28 INCH	1	
....2	849-2026	CBL,ASSY,.050 DOUBLE ROW 26 PIN FEMALE IDC ASSY,3.63 INCH	1	
....2	919-4035	ASSY, PCB, STX LP, ADDON PA, CONTROLLER (SBCM)	1	
.....3	003-0105	CAP, CER, 1UF, 100V, 1812, 20%, SMD	4	C31, C34, C35, C41
.....3	007-0100-035	CAP, LYTIC, 100UF, 35V, 20%, LOW IMP, SMD	2	C25, C26
.....3	007-1034-001	CAP,CER,.01UF,10%,50V,0603,SMD	16	C7, C8, C9, C10, C12, C13, C14, C15, C16, C17, C18, C19, C20, C21, C22, C23
.....3	007-1040-025	CAP,CER,.1UF,+80,-20%,25V,0603,SMD	17	C1, C2, C3, C5, C6, C11, C24, C27, C28, C29, C30, C32, C33, C36, C38, C40, C42
.....3	007-1075-100	CAP, CER CHIP, 10 UF, 10V, 1206	2	C37, C39
.....3	102-0000	RES,CHIP,0 OHM,0805,SMD	12	R46, R47, R49, R50, R57, R58, R60, R61, R71, R72, R74, R75
.....3	102-1000	RES,CHIP,100 OHMS,1/10W,1%,SMD	4	R2, R6, R31, R34
.....3	102-1001	RES,CHIP,1.00K OHMS,1/10W,1%,SMD	6	R10, R15, R18, R55, R77, R78
.....3	102-1002	RES,CHIP,10.0K OHMS,1/10W,1%,SMD	1	R56
.....3	102-1003	RES,CHIP,100K OHMS,1/10W,1%,SMD	1	R1
.....3	102-1004	RES,CHIP,1.00M OHMS,1/10W,1%,SMD	1	R63
.....3	102-2000	RES,CHIP,200 OHM,1/10 W,1% SMD	3	R25, R28, R64
.....3	102-2001	RES,CHIP,2.00K OHMS,1/10W,1%,SMD	16	R3, R4, R7, R8, R11, R12, R14, R20, R22, R24, R27, R30, R33, R36, R38, R40
.....3	102-2431	RES,CHIP,2.43K OHMS,1/10W,1%,SMD	9	R43, R44, R45, R52, R53, R54, R66, R68, R69
.....3	102-3160	RES,CHIP,3.16K OHMS,1/10W,1%,SMD	1	R70
.....3	102-5491	RES,CHIP,5.49K,1/10W,1%,SMD	1	R65

©2013 Broadcast Electronics

BOM LEVEL	PART NO.	DESCRIPTION	QTY	REF. DES.
.....3	104-0000	RES,CHIP,0 OHM JUMPER,0603,SMD	1	R42
.....3	104-1001	RES,CHIP,1.0 K OHM,1%,1/16W,0603,SMD	1	R67
.....3	204-0914	DIODE,SWITCHING,MMBD914LT1,SMD	2	D1, D2
.....3	216-1963	LINEAR TECH LT1963 1.5 AMP LDO ADJUSTABLE REGULATOR	1	U12
.....3	216-5235	ANALOG DEVICES AD5235 DIGITAL POTS	3	U5, U7, U14
.....3	216-6549	IC, DUAL LVDS DIFFERENTIAL DRIVERS AND RECEIVERS, TSSOP16	1	U1
.....3	216-7002	IC,MOSFET,2N7002LT1,SMD	4	Q1, Q2, Q3, Q4
.....3	216-7400	IC,SN74AHCT1G00DBV,2-INPUT POS NAND,DBV,SMD	1	U9
.....3	216-7408	IC, MC74VHC1G08, AND GATE, CMOS, SMT	1	U13
.....3	216-7414-001	IC, SCHMITT TRIGGERED SINGLE GATE INVERTER,SC-70	5	U3, U4, U8, U11, U15
.....3	216-7490	ANALOG DEVICES AD7490 16 CHAN A/D	1	U2
.....3	216-8574	IC, ADI AD8574 4CHANNEL R/R OP AMP	1	U10
.....3	224-4000	GATE, SINGLE, XOR, 2 INPUT, 8NS TPD	1	U6
.....3	231-0136	IC,VOLT REF,2.5V,8-PIN SOIC	1	D3
.....3	320-0603	LED GREEN SMD	1	DS1
.....3	366-0011	IND,10UH,SHIELDED,SMD	1	L1
.....3	413-0603	Chip,Test Point 0603 SMD	4	TP1, TP2, TP3, TP4
.....3	413-1520	TERM,TURRET SINGLE, .109 L, .078" BASE"	1	TP5
.....3	417-4604	CONN, PCB MOUNTED RJ45 RIGHT ANGLE WITH LEDS	1	J1
.....3	418-5026	CONN, 26 PIN, MALE, SMT, 0.050, KEYED, WITH LATCHES"	1	J2
.....3	519-4035	PCB, STX LP, ADDON PA, CONTROLLER	1	
....2	919-4060-100	ASSY, PCB, LPF/COUPLER, STX LP (SBCM)	1	
.....3	007-1024	CAP,CER,.001uF,50V,10%,SMD	4	C4, C6, C23, C24
.....3	007-1044	CAP,CER,0.1uF,50V,10%,SMD note	7	C2, C3, C7, C20, C21, C22, C25
.....3	007-1075-100	CAP, CER CHIP, 10 UF, 10V, 1206	2	C5, C19
.....3	007-4703	CAP, CER, 47pF, 50V, 5%, SMD	1	C1
.....3	007-5602-500	CAP,CER,56pF,50V,2%,SMD	1	C18
.....3	040-3312-005	CAP,MICA,RF,33PF,500V,5%,SMT	1	C12
.....3	046-0010-001	CAP,MICA,RF,10PF,500V,5%,SMT	2	C16, C17
.....3	046-0015	CAP, MICA, RF, 15PF, 500V, 5%, SMT	2	C8, C9
.....3	046-0027-001	CAP,MICA,RF,27PF,500V,5%,SMT	5	C10, C11, C13, C14, C15
.....3	101-0003	RES,THICK FILM,0 OHM,1/8W,5%,SMD	1	R35
.....3	101-1500	RES,THICK FILM,150,1/8W,SMD	2	R14, R18
.....3	101-3010	RES,CHIP,301 OHMS,1/8W,1%,SMD	2	R7, R8
.....3	102-1000	RES,CHIP,100 OHMS,1/10W,1%,SMD	2	R30, R31
.....3	102-1001	RES,CHIP,1.00K OHMS,1/10W,1%,SMD	4	R12, R16, R27, R32
.....3	102-1500	RES,CHIP,150 OHMS,1/10W,1%,SMD	2	R9, R10
.....3	102-2000	RES,CHIP,200 OHM,1/10 W,1% SMD	2	R15, R17
.....3	102-2001	RES,CHIP,2.00K OHMS,1/10W,1%,SMD	1	R34
.....3	102-3011	RES,CHIP,3.01K OHMS,1/10W,1%,SMD	1	R28
.....3	102-6409	RES,CHIP,64.9 OHMS,1/10W,1%,SMD	2	R11, R13
.....3	105-0036	RES, CHIP, 36 OHM, 1W, 5%, 2512	1	R21
.....3	105-0051	RES, CHIP, 51 OHM, 1W, 5%, 2512	1	R3
.....3	105-0150	RES, CHIP, 150 OHM, 1W, 5%, 2512	2	R5, R6

©2013 Broadcast Electronics

BOM LEVEL	PART NO.	DESCRIPTION	QTY	REF. DES.
.....3	105-0200	RES, CHIP, 200 OHM, 1%, 1/2W, 2010, SMD	3	R22, R25, R26
.....3	105-0430	RES, CHIP, 432 OHM, 1%, 1/2W, 2010, SMD	2	R23, R24
.....3	105-1010	RES, CHIP, 100 OHM, 1W, 5%, 2512, SMD	2	R19, R20
.....3	111-0082	RES ,82.5 OHM, 1W, 1%, 2512, SMD	2	R1, R4
.....3	198-0101	TRMR,100 OHMS,TOP ADJUST,SMD	1	R2
.....3	198-0502	TRMR,5K,TOP ADJUST,SMD	2	R29, R33
.....3	216-0830	IC,OP AMP,OPA830,SOT23-5,R/R OUTPUT	2	U3, U4
.....3	221-8361	IC, TRUE AVERAGE POWER DETECTOR	2	U1, U2
.....3	360-4202	COIL,10 GA,3T,88nH (SBCM)	4	L1, L2, L3, L4
.....4	640-1001	WIRE, 10 GA, TIN PLATED	0.542	
.....3	360-4209	COIL,12 GA,8T,.375ID (SBCM)"	1	L7
.....4	640-1200	WIRE,12GA,MAGNET	0.019	
.....3	366-0100	IND,100NH LAMINATED CER,0805,SMD	2	L5, L6
.....3	407-0505	EMI SHIELD,LT-3334, .75 X 1.5 X .50	2	
.....3	418-5010	CONN, 10 PIN, MALE, SMT, 0.050, KEYED, WITH LATCHES"	1	J1
.....3	519-4060	PCB, LPF, STX LP	1	
.....3	610-0017	CABLE,RF OUTPUT,LOW PASS FILTER,STX	1	
.....3	949-4103	CABLE,RG316,8.0L,417-1318,STRIP (SBCM)	1	
.....4	417-1318	CONN, BNC 50 OHM BULKHEAD TO RG-316	1	
.....4	621-1359	CBL,COAX,RG316/U,50 OHM	0.667	
....2	919-4075	ASSY, STX LP PA/COMBINER LED BOARD (SBCM)	1	
.....3	007-1044	CAP,CER,0.1uF,50V,10%,SMD note	4	C2, C3, C6, C9
.....3	007-3923	CAP,CER,390pF,100V,5%,SMD	2	C4, C8
.....3	007-4702-500	CAP,CER,47pF,50V,2%,SMD	2	C5, C7
.....3	070-1065	CAP,TANT,10UF,20V,10%,SMD	1	C1
.....3	102-0000	RES,CHIP,0 OHM,0805,SMD	5	R21, R24, R25, R26, R27
.....3	102-0100	RES,CHIP,10.0 OHMS,1/10W,1%,SMD	1	R22
.....3	102-1001	RES,CHIP,1.00K OHMS,1/10W,1%,SMD	2	R18, R20
.....3	102-1002	RES,CHIP,10.0K OHMS,1/10W,1%,SMD	2	R23, R30
.....3	102-1003	RES,CHIP,100K OHMS,1/10W,1%,SMD	4	R6, R11, R13, R16
.....3	102-1214	RES, CHIP, 1.21K OHM, 1/10W, 1%	1	R3
.....3	102-2001	RES,CHIP,2.00K OHMS,1/10W,1%,SMD	1	R29
.....3	102-2210	RES,CHIP,221 OHMS,1/10W,1%,SMD	1	R2
.....3	102-4021	RES,CHIP,4.02K OHMS,1/10W,1%,SMD	1	R19
.....3	102-7150	RES,CHIP,715 OHMS,1/10W,1%,SMD	9	R4, R7, R8, R9, R10, R12, R14, R15, R17
.....3	216-7002	IC,MOSFET,2N7002LT1,SMD	5	Q1, Q2, Q3, Q4, Q5
.....3	220-0035	IC,LM35DZ CELSIUS TEMP SENSOR	1	U3
.....3	221-0358-001	DUAL OP AMP, SMD, SOIC8	1	U2
.....3	231-3170	VR,LM317,SMD	1	U1
.....3	325-0807	LED,DUAL,SUPER RED/GRN,SMD,0807 (note)	5	DS1, DS2, DS3, DS4, DS5
.....3	340-0004	SW,JUMPER PROGRAMMABLE	1	P1
.....3	417-0308	CONN,JACK,3-PIN,SMD	1	J2
.....3	418-451	Diode, SMT, Zener, 5.1V Motorola BZX84C5V1LT1	1	D1
.....3	418-5010	CONN, 10 PIN, MALE, SMT, 0.050, KEYED, WITH LATCHES"	1	J1
.....3	519-4075	PCB, STX LP PA/COMBINER LED BOARD	1	

©2013 Broadcast Electronics

BOM LEVEL	PART NO.	DESCRIPTION	QTY	REF. DES.
....2	919-4090-200	ASSY, PCB, STX LP, PS MOTHER BOARD (TECTROL)	1	
.....3	007-1034	CAP,CER,0.01uF,50V,10%,SMD	3	C2, C3, C4
.....3	102-1001	RES,CHIP,1.00K OHMS,1/10W,1%,SMD	1	R1
.....3	102-1691	RES,CHIP,1.69K OHMS,1/10W,1%,SMD	1	R4
.....3	102-4221	RES,CHIP,4.22K,1/10W,1%,SMD	1	R3
.....3	102-5041	RES,4.99K OHM,1/10W,1%	2	R2, R5
.....3	105-1001	RES,CHIP,1K OHM,1%,1/4W,1210,SMD	1	R6
.....3	204-2030	DIODE,SCHOTTKY,30V,1A,SMB	2	D1, D2
.....3	210-5680	IC, MOSFET N-CH, 60V, 8A, SO-8	2	Q5, Q6
.....3	216-0433	IC,OPTO PS2705-1,SMD	1	U2
.....3	216-7002	IC,MOSFET,2N7002LT1,SMD	4	Q1, Q2, Q3, Q4
.....3	229-0555	IC,TIMER,NE555N	1	U1
.....3	340-0004	SW,JUMPER PROGRAMMABLE	2	P7, P8
.....3	408-0300	HEADER,3-PIN,.100 CENTERS,SIP,note	2	J7, J8
.....3	417-0425	CONN,4-PIN,POWER-LOK	1	J3
.....3	417-0426	CONN,6-PIN,PCB MT,MALE,POWER	1	J5
.....3	417-0677	CONN,PCB MT,6PIN MALE	1	J2
.....3	417-0700	CONN,PCB MT,2PIN	1	J4
.....3	418-0900	CONN,9 PIN 640501-5 AMP	1	J6
.....3	418-2901	CONN, RA, FEMALE, POWER, 47 PIN POSITRONIC	1	J1
.....3	519-4090-200	PCB, MACH, STX LP, PS MOTHER BOARD (TECTROL)	1	
....2	949-4101-100	CABLE,12GA BLUE,6 LG,STRIP-PUSH ON (SBCM)	1	
.....3	410-0050	LUG,TERM,10-12GA,FEMSPADE	1	
.....3	601-1202-006	WIRE,AWG 12,STRANDED,LIGHT BLUE	0.5	
.....3	611-3750	TUB,HT SHK,3/8	0.104	
....2	949-4101-200	CABLE,12GA BROWN,6 LG,STRIP-PUSH ON (SBCM)	1	
.....3	410-0050	LUG,TERM,10-12GA,FEMSPADE	1	
.....3	601-1202-001	WIRE,AWG 12,STRANDED,BROWN	0.5	
.....3	611-3750	TUB,HT SHK,3/8	0.104	
....2	949-4101-401	HARNESS,DC POWER TO PA,STX1K (SBCM)	1	
.....3	402-0051	TY-RAP, W/FLAG	3	
.....3	417-0372	CONTACT,CONN,FC112N2	12	
.....3	418-0426	CONN,6-PIN,FEMALE,POWER,CABLE	2	
.....3	601-1200	WIRE,AWG12 19/25 BLK	3.75	
.....3	601-1202	WIRE,AWG12 19/25 RED	3.75	
....2	949-4101-403	HARNESS,AC INPUT TO SMALL PS's,STX1K (SBCM)	1	
.....3	402-0051	TY-RAP, W/FLAG	2	
.....3	410-2478	CRIMP TERMINAL,AMP 640707-1	6	
.....3	417-0053	SKT,CONN 641294-1 AMP	2	
.....3	417-0306	HSNG,3 POS,SL-156	3	
.....3	418-0701	CONN,HOUSING,2 PIN	1	
.....3	601-2209	WIRE,AWG22,7/30 WHT	3.167	
....2	949-4101-406	HARNESS,DC POWER,FAN,IPA,PS CONTROL (SBCM)	1	
.....3	402-0051	TY-RAP, W/FLAG	1	
.....3	410-2478	CRIMP TERMINAL,AMP 640707-1	8	

©2013 Broadcast Electronics

BOM LEVEL	PART NO.	DESCRIPTION	QTY	REF. DES.
.....3	417-0053	SKT,CONN 641294-1 AMP	17	
.....3	417-0059	CONN,9 PIN 1-640521-0 AMP	1	
.....3	417-0606	HSNG,6 POS,SL-156	1	
.....3	417-2816	PIN, CRIMP .100,22-24 GA"	8	
.....3	417-2820	CONN, 8 PIN, .100 LOCKING HOUSING"	1	
.....3	417-4025	HOUSING,4-PIN,AMP 640250-4	1	
.....3	418-0240	PLUG,FEM,4PIN	1	
.....3	418-0670	HOUSING,CONN,6PIN FEM	1	
.....3	601-2209	WIRE,AWG22,7/30 WHT	22.896	
....2	949-4101-407	HARNESS, AC INPUT,STX WITH TECTROL PS (SBCM)	1	
.....3	402-0051	TY-RAP, W/FLAG	1	
.....3	410-0015	LUG,TERM #8 RING CRIMP 12-10	2	
.....3	410-0050	LUG,TERM,10-12GA,FEMSPADE	2	
.....3	417-0372	CONTACT,CONN,FC112N2	3	
.....3	417-0420	CONN, FEM, 4 POSITION, POWER-LOK, WIRE	1	
.....3	601-1202-001	WIRE,AWG 12,STRANDED,BROWN	1.541	
.....3	601-1202-006	WIRE,AWG 12,STRANDED,LIGHT BLUE	1.541	
.....3	601-1202-054	WIRE,AWG 12,STRANDED, GREEN/YELLOW	2.208	
.....3	611-3750	TUB,HT SHK,3/8	0.208	
....2	949-4102	CABLE,RG316,20.0L,417-1318,417-8030(SBCM)	1	
.....3	417-1318	CONN, BNC 50 OHM BULKHEAD TO RG-316	1	
.....3	417-8030	CONN,PLUG,RT ANG,SMA,HEX CRIMP	1	
.....3	621-1359	CBL,COAX,RG316/U,50 OHM	1.667	
....2	959-4101	ASSY PA, COMB, HSINK, STX	1	
.....3	471-4040	PLATE,ALUM BACKER,LUMP COMBINER,STX LP	1	
.....3	500-211	Screw,SEMS 4-40x3/8 Ph Pan Head MS Black Zinc (External)	11	
.....3	919-4040	ASSY, PCB, COMBINER, STX LP	1	
.....4	046-0022	CAP,MICA,RF,22PF	4	C1, C5, C13, C11
.....4	046-0022-001	CAP,MICA,RF,22PF,500V,5%,SMT	6	C3, C6, C8, C9, C14, C16
.....4	046-0024-001	CAP,MICA,RF,24PF,500V,5%,SMT	2	C4, C10
.....4	131-1004	RES,100 OHM,5%,250W,FLANGED	2	R102, R112
.....4	131-1123	RES,100 OHM,5%,400W,FLANGED	1	R110
.....4	241-120	CAPACITOR, UNCASED MICA 12PF 5% FWM602	4	C2, C12, C7, C15
.....4	360-4200	COIL,10 GA,4T,95nH,CLOCKWISE WHILE RECEDING (SBCM)	3	L3, L5, L6
.....5	640-1001	WIRE, 10 GA, TIN PLATED	0.667	
.....4	360-4201	COIL,10 GA,4T,95nH,COUNTER-CLOCKWISE WHILE RECEDING (SBCM)	3	L1, L2, L4
.....5	640-1001	WIRE, 10 GA, TIN PLATED	0.667	
.....4	519-4040	PCB, COMBINER, STX LP	1	
.....3	959-4101-001	STX,PA SUB ASSMBLY,1KW	1	
.....4	210-2932	TSTR, RF POWER, SD2932 (note)	4	Q1, Q2, Q3, Q4
.....4	210-8535	TSTR, RF POWER, PD85035C	1	Q8
.....4	370-0069-001	ASSY COIL, STX PA (SBCM)	4	L16, L17, L19, 20
.....5	610-2401	WIRE,TEFLON,18 AWG,600V,200C	0.21	

©2013 Broadcast Electronics

BOM LEVEL	PART NO.	DESCRIPTION	QTY	REF. DES.
.....4	420-4306	SCREW,4-40X.375,S.S. SHCS	10	
.....4	423-4001	#4 FLAT SS .250 X .125 X .018	8	
.....4	423-4002	#4 LOCK S.S. SPLIT	10	
.....4	455-4000-200	HEATSINK,WIDE,STX 1KW	1	
.....4	471-4224	PLATE,SPACER,PD85035C TRANSISTOR,STX LP IPA	1	
.....4	500-211	Screw,SEMS 4-40x3/8 Ph Pan Head MS Black Zinc (External)	16	
.....4	519-4055	PCB, SUB-BOARD, PA, STX LP	1	
.....4	594-0019	LABEL,DANGER HV 1X 1.5	1	
.....4	594-0099	LABEL,WARNING HIGH CURRENT",1" X 1.5",VINYL,ADHESIVE BACKED"	1	
.....4	919-4050	ASSY, PCB, PA, STX LP (SBCM)	1	
.....5	003-0105	CAP, CER, 1UF, 100V, 1812, 20%, SMD	2	C30, C211
.....5	006-1006	CAP,47 uF,Electrolytic,63V,SMD (NOTE)	8	C167, C178, C207, C209, C235, C236, C237, C238
.....5	006-1075	CAP,LYTIC,10uF,50V,20%,SMD note	2	C37, C38
.....5	006-1075-350	CAP,LYTIC,10uF,35V,20%,NP,SMD	8	C64, C67, C74, C122, C137, C140, C190, C200
.....5	006-1085	CAP,ELECTRO,100 UF,10%,35V,SMD	2	C15, C21
.....5	007-0020-006	CAP,20pF,5%,50v,SMD,0603	1	C82
.....5	007-0100-035	CAP, LYTIC, 100UF, 35V, 20%, LOW IMP, SMD	2	C228, C229
.....5	007-0227	CAP,LYTIC,220UF,35V,SMT,LOW ESR	2	C231, C232
.....5	007-1024	CAP,CER,.001uF,50V,10%,SMD	23	C3, C4, C7, C11, C14, C22, C24, C33, C34, C36, C40, C41, C49, C50, C56, C69, C70, C131, C150, C154, C155, C161, C198
.....5	007-1034	CAP,CER,0.01uF,50V,10%,SMD	1	C45
.....5	007-1044	CAP,CER,0.1uF,50V,10%,SMD note	54	C1, C2, C5, C6, C8, C9, C10, C12, C13, C18, C23, C25, C27, C29, C31, C39, C43, C44, C46, C48, C52, C54, C55, C58, C61, C63, C65, C66, C73, C86, C109, C110, C111, C114, C115, C123, C124, C129, C134, C135, C153, C166, C168, C171, C174, C175, C176, C199, C206,

©2013 Broadcast Electronics

BOM LEVEL	PART NO.	DESCRIPTION	QTY	REF. DES.
.....5	007-1044-200	CAP, CHIP, .1UF, 200V, 20%, SMD	8	C26, C28, C32, C35, C47, C51, C59, C62
.....5	007-1054	CAP,CER,1uF,50V,10%,SMD	2	C17, C19
.....5	007-1075-100	CAP, CER CHIP, 10 UF, 10V, 1206	1	C113
.....5	007-2202-050	CAP,CER,22 PFD,5%,50V,1206,SMD	1	C118
.....5	007-3912	CAP,CER,39pF,50V,5%,SMD	1	C117
.....5	007-3923	CAP,CER,390pF,100V,5%,SMD	1	C20
.....5	007-4724	CAP,CER,0.047uF,50V,10%,SMD	4	C42, C53, C57, C71
.....5	009-1013	CAP,CER CHIP,10PF,500V,5%	4	C98, C99, C188, C193
.....5	009-1023	CAP,CER CHIP,100PF,500V,5%	8	C90, C93, C97, C169, C170, C173, C186, C187
.....5	009-1032-050	CAP,CER CHIP,1000PF,50V,5%	9	C72, C77, C84, C85, C88, C126, C133, C158, C159
.....5	009-1033	CAP,CER CHIP,1000PF,500V,5%	7	C233, C234, C239, C246, C247, C248, C249
.....5	009-1223	CAP,CER CHIP,120PF,300V,5%	1	C149
.....5	009-1813	CAP,CER CHIP,18 PF,5%,500V	6	C212, C213, C216, C217, C226, C227
.....5	009-1823	CAP,CER CHIP,180PF,300V,5%	1	C138
.....5	009-2023	CAP,CER CHIP,200PF,300V,5%	2	C139, C177
.....5	009-2723	CAP,CER CHIP,270PF,300V,5%	8	C92, C95, C103, C119, C183, C184, C197, C201
.....5	009-3013	CAP,CER CHIP,30PF,500V,5%	1	C68
.....5	009-3913	CAP, CER CHIP, 39PF, 500V, 5%	9	C79, C81, C94, C162, C164, C165, C215, C240, C241
.....5	009-4723	CAP,CER CHIP,470PF,200V,5%	28	C75, C76, C78, C80, C83, C87, C89, C91, C96, C102, C106, C128, C141, C142, C144, C145, C146, C147, C151, C152, C156, C157, C160, C163, C191, C220, C224, C225
.....5	009-5613	CAP,CER CHIP,56PF,500V,5%	1	C148
.....5	009-6813	CAP,CER CHIP,68PF,500V,5%	5	C107, C120, C136, C202, C203
.....5	009-8013	CAP,CER CHIP,82PF,500V,5%	4	C108, C127, C222, C223
.....5	020-4785	CAP,LYTIC,470UF,100V,20%,STDUP	4	C242, C243, C244, C245
.....5	046-1030	CAP,METAL FEED,1000PF,350V,10%	4	C100, C112, C189, C192
.....5	070-2265-L25	CAP,TANT,22 MFD,20%,25V, E CASE,LOW ESR,SMD	1	C16

©2013 Broadcast Electronics

BOM LEVEL	PART NO.	DESCRIPTION	QTY	REF. DES.
.....5	090-0004	CAP,TRMR,CER,4-25PF,SMD,NPO	8	C104, C105, C121, C125, C204, C205, C214, C218
.....5	090-5010	CAP,TRIM,MONO CERAMIC,6-50pF,50V	4	C101, C116, C194, C195
.....5	102-0000	RES,CHIP,0 OHM,0805,SMD	5	R56, R117, R126, R133, R155
.....5	102-1000	RES,CHIP,100 OHMS,1/10W,1%,SMD	13	R1, R6, R10, R11, R17, R18, R54, R71, R87, R102, R110, R148, R268
.....5	102-1001	RES,CHIP,1.00K OHMS,1/10W,1%,SMD	18	R14, R26, R33, R37, R44, R48, R62, R68, R69, R79, R85, R99, R118, R147, R153, R198, R199, R222
.....5	102-1002	RES,CHIP,10.0K OHMS,1/10W,1%,SMD	31	R3, R8, R16, R22, R24, R34, R38, R41, R50, R51, R52, R55, R59, R75, R76, R78, R82, R88, R89, R92, R100, R103, R111, R116, R119, R138, R175, R242, R243, R245, R250
.....5	102-1003	RES,CHIP,100K OHMS,1/10W,1%,SMD	15	R27, R30, R39, R45, R49, R64, R70, R86, R105, R112, R190, R191, R212, R221, R224
.....5	102-1004	RES,CHIP,1.00M OHMS,1/10W,1%,SMD	1	R241
.....5	102-1214	RES, CHIP, 1.21K OHM, 1/10W, 1%	2	R5, R9
.....5	102-1331	RES,CHIP,1.33K OHMS,1/10W,1%,SMD	5	R25, R36, R43, R61, R84
.....5	102-1500	RES,CHIP,150 OHMS,1/10W,1%,SMD	1	R254
.....5	102-1501	RES,1.50K OHM,1/10W,1%	1	R13
.....5	102-1503	RES,CHIP,150K OHMS,1/10W,1%,SMD	3	R74, R104, R223
.....5	102-1553	RES,CHIP,15.0K OHMS,1/10W,1%,SMD	1	R247
.....5	102-2212	RES,CHIP,22.1K OHMS,1/10W,1%,SMD	2	R80, R200
.....5	102-2214	RES,CHIP,2.21K OHM,1/10W,1%	2	R2, R12
.....5	102-2273	RES,CHIP,2.2M OHM,1/10 W,5%	1	R73
.....5	102-2430	RES,CHIP,243 OHMS,1/10W,1%,SMD, 0805	1	R63
.....5	102-2492	RES,CHIP,24.9K OHMS,1/10W,1%,SMD	4	R31, R46, R65, R90
.....5	102-2741	RES,CHIP,2.74K OHMS,1/10W,1%,SMD	4	R35, R53, R77, R255
.....5	102-3001	RES,CHIP,30.1 OHMS,1/10W,1%,SMD	1	R156
.....5	102-3011	RES,CHIP,3.01K OHMS,1/10W,1%,SMD	1	R151
.....5	102-3162	RES,CHIP,31.6 K,1/10 W, 1%	4	R40, R58, R81, R95
.....5	102-3320	RES,CHIP,332 OHMS,1/10W,1%,SMD	7	R109, R113, R195, R210, R217, R220, R238
.....5	102-3323	RES,CHIP,332K OHMS,1/10W,1%,SMD	1	R211

©2013 Broadcast Electronics

BOM LEVEL	PART NO.	DESCRIPTION	QTY	REF. DES.
.....5	102-4321	RES,CHIP,4.32K OHMS,1/10W,1%,SMD	2	R4, R7
.....5	102-4532	RES,CHIP,45.3K OHMS,1/10W,1%,SMD	1	R19
.....5	102-4992	RES,49.9K OHMS,1/10W,1%,SMD	10	R93, R94, R120, R122, R123, R124, R127, R139, R140, R166
.....5	102-4993	RES,CHIP,499K OHMS,1/10W,1%,SMD	4	R42, R60, R83, R96
.....5	102-5041	RES,4.99K OHM,1/10W,1%	1	R20
.....5	102-5110	RES,CHIP,511 OHMS,1/10W,1%,SMD	6	R72, R192, R193, R194, R196, R197
.....5	102-6409	RES,CHIP,64.9 OHMS,1/10W,1%,SMD	1	R152
.....5	102-7150	RES,CHIP,715 OHMS,1/10W,1%,SMD	1	R66
.....5	102-8164	RES, CHIP, 8.66K OHM, 1/10W, 1% ,CR21-8661F-T	1	R23
.....5	102-8252	RES,82.5K OHM,1/10W,1%	1	R57
.....5	104-0000	RES,CHIP,0 OHM JUMPER,0603,SMD	6	R177, R179, R181, R183, R185, R187
.....5	105-0003	RES .30 OHM 1/2W 1% 2010 SMD	1	R29
.....5	105-0010	RES, CHIP, 10 OHM, 1W, 1%, 2512	1	R129
.....5	105-0043	RES,CHIP,43 OHM,5%,1W,SMD	2	R164, R169
.....5	105-0102	RES, CHIP, 1K OHM, 1W, 5%, 2512	4	R21, R173, R174, R270
.....5	105-0294	RES,CHIP,294 OHM,1W,1%,2512,SMD	1	R134
.....5	105-0430	RES, CHIP, 432 OHM, 1%, 1/2W, 2010, SMD	2	R135, R136
.....5	111-0006	RES .01 OHM 3W CURRENT SENSE, SMT	4	R28, R32, R47, R67
.....5	111-0040-003	RES .04 OHM 3W CURRENT SENSE, SMT	1	R15
.....5	111-2223	RES,CHIP,22 OHM,1W,5%	26	R97, R98, R101, R106, R107, R108, R125, R128, R130, R131, R132, R141, R142, R143, R144, R145, R146, R149, R154, R158, R160, R162, R163, R165, R168, R269
.....5	131-7031	RES,100 OHM,5%,10W,SMT	2	R157, R189
.....5	131-7031-020	RES, 100 OHM, 5%, 20W, SMT	1	R188
.....5	198-0503	TRMR,50K,TOP ADJUST,SMD	4	R91, R114, R115, R137
.....5	198-1054	TRMR,10K OHMS,TOP ADJ,SMD (N)	2	R121, R159
.....5	204-0130	SCHOTTKY BARRIER RECTIFIER 1 AMP 30V CASE 403A SMD	1	D10

©2013 Broadcast Electronics

BOM LEVEL	PART NO.	DESCRIPTION	QTY	REF. DES.
.....5	204-0914	DIODE,SWITCHING,MMBD914LT1,SMD	54	D1, D2, D3, D5, D7, D8, D11, D13, D14, D15, D17, D18, D19, D20, D21, D22, D23, D25, D26, D27, D28, D29, D30, D31, D32, D33, D34, D36, D37, D38, D39, D40, D41, D42, D43, D44, D45, D47, D50, D51, D53, D54, D55, D56, D57, D59, D61, D62, D63, D67, D68, D69, D70
.....5	210-0084	TSTR, MOSFET, P CHNL, 130MA, 50V, 10 OHM, SMD	1	Q5
.....5	210-1047	DIODE,ZENER,4.7V,225MW,SMD,SOT23	6	D48, D49, D52, D58, D64, D66
.....5	210-5500	TSTR, RF POWER, PD55003-E	1	Q12
.....5	216-0830	IC,OP AMP,OPA830,SOT23-5,R/R OUTPUT	8	U1, U3, U5, U7, U12, U14, U22, U30
.....5	216-1490	IC,OP AMP,LT1490,DUAL,R/R I/O,SMT	6	U6, U11, U15, U20, U26, U34
.....5	216-2011	IC,CURRENT MONITOR,60V,G=10,SOT23-5	6	U4, U10, U18, U19, U21, U25
.....5	216-4013	IC,MC14013BD DUAL D FLIP FLOP,SMD	1	U17
.....5	216-7002	IC,MOSFET,2N7002LT1,SMD	10	Q6, Q7, Q9, Q10, Q11, Q13, Q14, Q16, Q17, Q20
.....5	216-7408	IC, MC74VHC1G08, AND GATE, CMOS, SMT	1	U23
.....5	220-0035	IC,LM35DZ CELSIUS TEMP SENSOR	2	U2, U8
.....5	220-7425	IC, COMPARATOR, LMV7219, 7NS, 2.5-5V, R-R	3	U16, U24, U40
.....5	221-0072-A	AMP,OP,LOW NOISE,SOIC8	1	U29
.....5	221-8361	IC, TRUE AVERAGE POWER DETECTOR	1	U32
.....5	224-1491	IC,OP AMP,QUAD,RAIL TO RAIL,SMD	1	U27
.....5	227-1576	VR, LT1576IS8, SWITCHER, 1.5A, SMD	1	U9
.....5	231-3170	VR,LM317,SMD	1	U13
.....5	320-0603	LED GREEN SMD	3	DS7, DS10, DS12
.....5	325-0252	LED,RED/ORN,1206,SMD	4	DS1, DS2, DS6, DS32
.....5	330-0009	FUSE,10A,2014,FAST-ACTING	1	F5
.....5	330-0062	FUSE, SMD, 20A, 125V	4	F1, F2, F3, F4
.....5	340-0004	SW,JUMPER PROGRAMMABLE	7	P1, P2, P3, P5, P6, P9, P10
.....5	350-197	INDUCTOR, SMT, POWER, 1uH	2	L2, L3
.....5	350-200	INDUCTOR, SMT, 1812, 56NH	1	L26
.....5	350-202	IND, SMT, 1812, 39 NH	1	L38
.....5	360-0125	IND, 68 UH, 1.5A, SMD	1	L1

©2013 Broadcast Electronics

BOM LEVEL	PART NO.	DESCRIPTION	QTY	REF. DES.
.....5	360-4203	COIL,16 GA,4T,47nH (SBCM)	1	L29
.....6	601-0016	WIRE AWG16, BUSS	0.333	
.....5	360-4204	COIL,16 GA,2T,18nH (SBCM)	1	L31
.....6	601-0016	WIRE AWG16, BUSS	0.208	
.....5	360-4205	COIL,16 GA,1T,5nH (SBCM)	1	L30
.....6	601-0016	WIRE AWG16, BUSS	0.104	
.....5	360-4208	WIRE,POWER DIST,PA,STX LP(SBCM)	1	W1
.....6	640-1001	WIRE, 10 GA, TIN PLATED	0.792	
.....5	366-0010-001	IND,10UH,1.5A	3	L6, L7, L27
.....5	366-0022-001	IND, 22 NH, AIR, 16 MM, 5%, SMD	5	L18, L21, L22, L24, L39
.....5	366-0068-100	IND, 68NH, AIR, 5%, SMD, B10J	1	L15
.....5	366-0100	IND,100NH LAMINATED CER,0805,SMD	1	L23
.....5	366-0111	INDUCTOR,SMD,AIR CORE,10T,111NH,5%	1	L28
.....5	366-0126	INDUCTOR,SMD,AIR CORE,11T,130nH	6	L32, L33, L34, L35, L36, L37
.....5	366-0130	INDUCTOR,POWER,SMD,1uH,10A	2	L25, L40
.....5	366-0380	IND,380NH,AIR CORE,SMT	1	L8
.....5	366-6152	FERRITE,CHIP IMPEDANCE 1500OHMS @ 100MHZ MULTILAYER, 0805	8	L4, L5, L9, L10, L11, L12, L13, L14
.....5	370-0062	ASSY,FM-10S,XFMR,RF AMP OUTPUT (SBCM)	4	T1, T4, T7, T8
.....6	463-0126	TUBING,COPPER,1/8X.014X1.530	4	
.....6	610-2401	WIRE,TEFLON,18 AWG,600V,200C	0.8	
.....5	370-0063	ASSY,FM-10S,XFMR,RF AMP INPUT (SBCM)	4	T2, T3, T5, T6
.....6	610-2401	WIRE,TEFLON,18 AWG,600V,200C	0.22	
.....5	407-0501	EMI SHIELD, MODIFIED 50KE-CBSAFN-2.5x3.25x.50	1	
.....5	408-0300	HEADER,3-PIN,.100 CENTERS,SIP,note	1	J7
.....5	413-0603	Chip,Test Point 0603 SMD	7	TP24, TP25, TP26, TP27, TP28, TP29, TP30
.....5	413-1206	CHIP,TEST POINT,1206,SMD	23	TP1, TP2, TP3, TP4, TP5, TP6, TP7, TP8, TP9, TP10, TP11, TP12, TP13, TP14, TP15, TP16, TP17, TP18, TP19, TP20, TP21, TP22, TP23
.....5	417-0426	CONN,6-PIN,PCB MT,MALE,POWER	1	J1
.....5	417-0701	CONN,SMA FEMALE PC MOUNT	1	J11
.....5	417-1041	HDR,4PIN,SINGLE ROW,SMT,0.1SP	6	J3, J5, J6, J8, J9, J10
.....5	417-4568	CONN HEADER VERT 8POS .100 TIN	1	J4
.....5	418-451	Diode, SMT, Zener, 5.1V Motorola BZX84C5V1LT1	1	D12
.....5	418-5010	CONN, 10 PIN, MALE, SMT, 0.050, KEYED, WITH LATCHES"	2	J12, J13
.....5	418-5026	CONN, 26 PIN, MALE, SMT, 0.050, KEYED, WITH LATCHES"	1	J2
.....5	463-0127	TUBING,COPPER,1/8X.014X1.300	4	

©2013 Broadcast Electronics

BOM LEVEL	PART NO.	DESCRIPTION	QTY	REF. DES.
.....5	519-4050	PCB, PA, STX LP	1	
....2	959-4102-380	ASSY,FAN,STX WITH TECTROL PS	1	
.....3	380-6307	FINGER GUARD,FAN,4.125 CENTERS	2	
.....3	380-9007-001	FAN,LUGGED,AXIAL,12V,120MM X 38MM,3600RPM	2	
.....4	380-9007	FAN,12V,120MM X 38MM,3600RPM	1	
.....4	417-0036	PIN CONN,AMP,350967-1	2	
.....3	400-0207	STRIP,QUIET SHIELD,.250x.375""	1.688	
.....3	418-0233	HSNG,CONN, 4P,1-640509-AMP	1	
.....3	420-6108	SCREW,6-32X.500,S.S. PH	8	
.....3	421-6008	6-32 KEP NUT	8	
.....3	471-4201-200	PANEL,FAN MOUNTING,STX LP	1	

©2013 Broadcast Electronics

BOM LEVEL	PART NO.	DESCRIPTION	QTY	REF. DES.
0	959-4201-100	ASSY, SPLITTER/COMBINER, FM, STX LP, 2KW		
..1	324-2500	LIGHTPIPE,0.197 DIA,0.5 LONG, PANEL MT.	4	
..1	349-0020	SWITCH, ROCKER, DPST, 20A	1	
..1	380-9006-001	FAN,WITH CONNECTOR,COUNTER ROTATING,12V DC,120 MM SQ X 76 MM	1	
....2	380-6307	FINGER GUARD,FAN,4.125 CENTERS	1	
....2	380-9006	FAN,COUNTER ROTATING,12V DC,120MM X 76MM	1	
....2	418-1105	CONN,PLUG,10-PIN,5X2,SAMTEC MINI-MATE	1	
....2	418-2024	PIN,FEMALE CRIMP,.100,20-24 AWG,GOLD,SAMTEC"	8	
..1	400-0014	GROMMET,3/8IDX5/8ODFOR7/16HOLE	1	
..1	400-0207	STRIP,QUIET SHIELD,.250x.375""	1.1	
..1	400-4200	GASKET, EXTRD EMI SHIELD SILCON,ALUM,SILVR	5.25	
..1	402-0000	TY-RAP	9	
..1	402-0001	TY-RAP,T+B TY24M,1-1/4 DIA	2	
..1	402-0833	CLAMP,CBL,1/4	2	
..1	409-0125	SCREW,POLYPRO, 4-40 x 1-1/2,PAN HEAD SLOT	4	
..1	411-7086	TERM BLK FEED-THRU 1-4MM GRAY	2	
..1	411-7866	TERM BLK,FEED-THRU,1-4MM GRN/YEL	1	
..1	420-0500	SCREW,10-32X.375,BR PH	2	
..1	420-3005	SCREW,5/16-18X1.000,S.S. BOLT	4	
..1	420-6110	SCREW,6-32X.625,S.S. PH	4	
..1	420-8106	SCREW,8-32X.375,S.S. PHH	5	
..1	420-8121	SCREW,8-32X.375,BR PH	2	
..1	420-8706	SCREW,8-32X.375,BRASS THUMB	1	
..1	420-9720	RETAINER,NUT,OD:0.26,FITS SHAFT 5/32""	4	
..1	421-6008	6-32 KEP NUT	2	
..1	421-8028	NUT,JAM,1/2-28 UNEF-2B	1	
..1	422-0110	SCREW,10-32 X 5/8,PPH,SEM,STEEL,ZINC PLATING"	4	
..1	422-6106	SCREW,SEMS 6-32 X 3/8 PAN PH. ST."	36	
..1	423-0007	#10 LOCK INT TOOTH	2	
..1	423-6002	#6 LOCK SPLIT	4	
..1	423-8002	#8 LOCK SPLIT	5	
..1	423-8006	#8 LOCK INT TOOTH	3	
..1	423-9002	WASH,INT TOOTH,1/2	1	
..1	427-0009-300	CONNECTOR,MODIFIED,OUTPUT,STX 3/5 KW	1	
..1	427-0010	ASSY,ADAPTOR 1 5/8 FLANGED	1	
..1	441-4801	STOFF, 1/2 SNAP LOCK NYLON .062 PCB"	8	
..1	441-6108	STOFF,MF,#6 X .500L,BRASS (NOTE)	13	
..1	450-1704	PLUG,HOLE,.687 NYL BLACK 2673	3	
..1	469-0021	FINGER STOCK,LAIRD 97-550,24 LONG"	3.333	
..1	469-0366	FINGER STOCK (NOTE!!!!!)	11	
..1	471-4220	FRONT PANEL,STX LP,2KW COMBINER	1	
..1	471-4225	SAFETY SHIELD FOR ELECTRICAL SOURCE STX LP	1	

©2013 Broadcast Electronics

BOM LEVEL	PART NO.	DESCRIPTION	QTY	REF. DES.
..1	471-4250-100	WELDMENT,CHASSIS,STX COMBINER	1	
..1	471-4253-100	ENCLOSURE,STX COMBINER	1	
..1	471-4256-100	COVER,INNER,STX COMBINER	1	
..1	471-4257-100	COVER,TOP,STX COMBINER	1	
..1	471-4261	STRAP,FAN,STX COMBINER	2	
..1	486-7150	HANDLE, 4 X 1.375", BRASS, CHROME PLATED, #10-32 THREADS"	2	
..1	510-273	Foam tape 1/2 thick X 3/4 wide X 17' LONG	0.083	
..1	540-1012-100	POWER SUPPLY, 12V 65W AC/DC CONVERTER 2X4" STX LP"	1	
..1	540-1012-501	POWER SUPPLY 12V 80/100W AC/DC 2X4IN	1	
..1	594-0073	LABEL,WARNING ROTATING FANS	1	
..1	594-0505	LABEL, WARNING-ONLY AUTHORIZED PERSONNEL	2	
..1	849-2010-100	CBL,ASSY,.050 DOUBLE ROW 10 PIN FEMALE IDC ASSEMBLY,28 INCH	1	
..1	849-2526	CBL,ASSY,.050 DOUBLE ROW 26 PIN FEMALE IDC ASSY,25.0 INCH	1	
..1	919-4045	ASSY,2 WAY COMBINER,STX COMBINER	1	
....2	007-0018-006	CAP,0603,18pF,50V,5%	1	C6
....2	007-1012	CAP,CER,10pF,50V,2%,SMD	3	C7, C14, C21
....2	007-1201	CAP,CER,12PF,50V,2%,SMD	7	C2, C3, C9, C10, C16, C17, C23
....2	007-1512	CAP,CER,15pF,50V,2%,SMD	1	C13
....2	007-2200	CAP,CER,2.2pF,50V,.25pF,SMD	3	C5, C12, C19
....2	007-2202-050	CAP,CER,22 PFD,5%,50V,1206,SMD	3	C4, C11, C18
....2	007-2202-500	CAP,CER,22pF,50V,2%,SMD	1	C20
....2	007-3300	CAP,CER,3.3PF,50V,.25pF,SMD	2	C22, C24
....2	007-3312	CAP,CER,33pF,50V,2%,SMD	3	C1, C8, C15
....2	046-0033	CAP,PTFE,RF,3.3PF,1000V,+/-0.5PF,SMT	2	C25, C26
....2	091-1511	CAP,TRIMMER,3-10 PF,NPO,25V,SMD	1	C27
....2	105-0018	RES,CHIP,18.2 OHM,1W,1%,2512,SMD	3	R2, R10, R18
....2	105-0075	Chip Res,75 ohm 1W 1% SMD 2512	3	R1, R9, R17
....2	105-0102	RES, CHIP, 1K OHM, 1W, 5%, 2512	9	R5, R6, R7, R13, R14, R21, R22, R24, R30
....2	105-0294	RES,CHIP,294 OHM,1W,1%,2512,SMD	6	R3, R4, R11, R12, R19, R20
....2	105-0301	RES, CHIP, 300 OHM, 5%, 1W, 2512, SMD	7	R8, R15, R16, R23, R26, R28, R29
....2	178-5045	RES,TRMR,5K,20T,VERT	2	R25, R27
....2	360-4210	COIL,12 GA,9.45T,280nH	1	L15
.....3	640-1200	WIRE,12GA,MAGNET	0.026	
....2	366-0120-100	IND, 120NH, AIR, 5%, SMD, 1812	9	L1, L2, L3, L4, L5, L6, L7, L8, L9
....2	417-0265	CONN,BNC,JACK,THREADED,PC EDGE MOUNT,LOW PROFILE	1	J1
....2	417-1701	STRAIGHT JACK RECEPTACLE,SMB PCB MOUNT 50 OHM	2	J2, J3
....2	426-0000	PEM NUT,#10-32 KFS2-032	2	F1, F2
....2	519-4045	PCB,2 WAY COMBINER,STX COMBINER	1	PCB

©2013 Broadcast Electronics

BOM LEVEL	PART NO.	DESCRIPTION	QTY	REF. DES.
..1	919-4075	ASSY, STX LP PA/COMBINER LED BOARD (SBCM)	1	
....2	007-1044	CAP,CER,0.1uF,50V,10%,SMD note	4	C2, C3, C6, C9
....2	007-3923	CAP,CER,390pF,100V,5%,SMD	2	C4, C8
....2	007-4702-500	CAP,CER,47pF,50V,2%,SMD	2	C5, C7
....2	070-1065	CAP,TANT,10UF,20V,10%,SMD	1	C1
....2	102-0000	RES,CHIP,0 OHM,0805,SMD	5	R21, R24, R25, R26, R27
....2	102-0100	RES,CHIP,10.0 OHMS,1/10W,1%,SMD	1	R22
....2	102-1001	RES,CHIP,1.00K OHMS,1/10W,1%,SMD	2	R18, R20
....2	102-1002	RES,CHIP,10.0K OHMS,1/10W,1%,SMD	2	R23, R30
....2	102-1003	RES,CHIP,100K OHMS,1/10W,1%,SMD	4	R6, R11, R13, R16
....2	102-1214	RES, CHIP, 1.21K OHM, 1/10W, 1%	1	R3
....2	102-2001	RES,CHIP,2.00K OHMS,1/10W,1%,SMD	1	R29
....2	102-2210	RES,CHIP,221 OHMS,1/10W,1%,SMD	1	R2
....2	102-4021	RES,CHIP,4.02K OHMS,1/10W,1%,SMD	1	R19
....2	102-7150	RES,CHIP,715 OHMS,1/10W,1%,SMD	9	R4, R7, R8, R9, R10, R12, R14, R15, R17
....2	216-7002	IC,MOSFET,2N7002LT1,SMD	5	Q1, Q2, Q3, Q4, Q5
....2	220-0035	IC,LM35DZ CELSIUS TEMP SENSOR	1	U3
....2	221-0358-001	DUAL OP AMP, SMD, SOIC8	1	U2
....2	231-3170	VR,LM317,SMD	1	U1
....2	325-0807	LED,DUAL,SUPER RED/GRN,SMD,0807 (note)	5	DS1, DS2, DS3, DS4, DS5
....2	340-0004	SW,JUMPER PROGRAMMABLE	1	P1
....2	417-0308	CONN,JACK,3-PIN,SMD	1	J2
....2	418-451	Diode, SMT, Zener, 5.1V Motorola BZX84C5V1LT1	1	D1
....2	418-5010	CONN, 10 PIN, MALE, SMT, 0.050, KEYED, WITH LATCHES"	1	J1
....2	519-4075	PCB, STX LP PA/COMBINER LED BOARD	1	
..1	919-4095-001	ASSY, STX LP COMBINER FILTER BOAR (SBCM)	1	
....2	007-0100-035	CAP, LYTIC, 100UF, 35V, 20%, LOW IMP, SMD	1	C6
....2	007-0102	CAP,CER,CHIP,1000pF,50V,5%,SMD	4	C11, C12, C17, C18
....2	007-1044	CAP,CER,0.1uF,50V,10%,SMD note	10	C1, C4, C7, C8, C10, C13, C14, C16, C19, C21
....2	007-1075-100	CAP, CER CHIP, 10 UF, 10V, 1206	2	C9, C15
....2	070-1065	CAP,TANT,10UF,20V,10%,SMD	3	C3, C5, C20
....2	102-0000	RES,CHIP,0 OHM,0805,SMD	2	R9, R25
....2	102-0152	RES,CHIP,1.5K OHM,0.1%,1/10W,0805,SMD	1	R20
....2	102-1000	RES,CHIP,100 OHMS,1/10W,1%,SMD	2	R12, R18
....2	102-1001	RES,CHIP,1.00K OHMS,1/10W,1%,SMD	4	R11, R13, R14, R19
....2	102-1002	RES,CHIP,10.0K OHMS,1/10W,1%,SMD	1	R3
....2	102-1200	RES,CHIP,121 OHMS,1/10W,1%,SMD (NOTE)	2	R2, R6
....2	102-2001	RES,CHIP,2.00K OHMS,1/10W,1%,SMD	2	R17, R23
....2	102-3012	RES,CHIP,30.1K,1/10W,1%,SMD	1	R1
....2	102-3570	RES,CHIP,357 OHMS,1/10W,1%,SMD	1	R10
....2	102-6409	RES,CHIP,64.9 OHMS,1/10W,1%,SMD	2	R15, R21

©2013 Broadcast Electronics

BOM LEVEL	PART NO.	DESCRIPTION	QTY	REF. DES.
....2	102-7521	RES,CHIP,75 OHMS,1/10W,1%,SMD	4	R4, R5, R7, R8
....2	178-5045	RES,TRMR,5K,20T,VERT	2	R16, R22
....2	216-0830	IC,OP AMP,OPA830,SOT23-5,R/R OUTPUT	2	U1, U3
....2	221-8361	IC, TRUE AVERAGE POWER DETECTOR	2	U2, U4
....2	320-0603	LED GREEN SMD	2	DS1, DS2
....2	350-197	INDUCTOR, SMT, POWER, 1uH	2	L1, L2
....2	417-0700	CONN,PCB MT,2PIN	1	J8
....2	417-0701	CONN,SMA FEMALE PC MOUNT	1	J3
....2	417-1102	CONN,HEADER,VERT,4-PIN,2X2,SAMTEC MINI-MATE	1	J6
....2	417-1105	CONN,HEADER,VERT,10-PIN,5X2,SAMTEC MINI-MATE	1	J4
....2	417-1701	STRAIGHT JACK RECEPTACLE,SMB PCB MOUNT 50 OHM	1	J5
....2	418-0255	CONN,MALE,4PIN	1	J2
....2	418-5010	CONN, 10 PIN, MALE, SMT, 0.050, KEYED, WITH LATCHES"	1	J7
....2	418-5026	CONN, 26 PIN, MALE, SMT, 0.050, KEYED, WITH LATCHES"	1	J1
....2	519-4095-001	PCB, STX LP COMBINER FILTER BOARD	1	PCB
..1	949-4101-100	CABLE,12GA BLUE,6 LG,STRIP-PUSH ON (SBCM)	1	
....2	410-0050	LUG,TERM,10-12GA,FEMSPADE	1	
....2	601-1202-006	WIRE,AWG 12,STRANDED,LIGHT BLUE	0.5	
....2	611-3750	TUB,HT SHK,3/8	0.104	
..1	949-4101-200	CABLE,12GA BROWN,6 LG,STRIP-PUSH ON (SBCM)	1	
....2	410-0050	LUG,TERM,10-12GA,FEMSPADE	1	
....2	601-1202-001	WIRE,AWG 12,STRANDED,BROWN	0.5	
....2	611-3750	TUB,HT SHK,3/8	0.104	
..1	949-4114-100	HARNESS,MAIN,STX COMBINER WITH -501 PS (SBCM)	1	
....2	410-0065	LUG,TERM #6 RING CRIMP #22 AWG	1	
....2	410-1421	LUG,QUICK DISCONNECT #18-22	2	
....2	410-2478	CRIMP TERMINAL,AMP 640707-1	10	
....2	417-0053	SKT,CONN 641294-1 AMP	6	
....2	417-0306	HSNG,3 POS,SL-156	2	
....2	417-0606	HSNG,6 POS,SL-156	1	
....2	417-2806	CONNECTOR, HOUSING, 4-PIN .001" 1.000 " "		
....2	417-2816	PIN, CRIMP .100,22-24 GA"	4	
....2	417-4025	HOUSING,4-PIN,AMP 640250-4	1	
....2	418-0240	PLUG,FEM,4PIN	1	
....2	418-0701	CONN,HOUSING,2 PIN	1	
....2	418-1102	CONN,PLUG,4-PIN,2X2,SAMTEC MINI-MATE	1	
....2	418-2024	PIN,FEMALE CRIMP,.100,20-24 AWG,GOLD,SAMTEC"	4	
....2	601-1800-054	WIRE,AWG 18,STRANDED,GREEN/YELLOW	1.917	
....2	601-2209	WIRE,AWG22,7/30 WHT	18.167	
....2	611-2500	TUB,HT SHK,1/4	0.167	
....2	611-3750	TUB,HT SHK,3/8	0.208	
..1	949-4115	CABLE,RFL PWR,STX COMBINER,3KW/5KW	1	

©2013 Broadcast Electronics

BOM LEVEL	PART NO.	DESCRIPTION	QTY	REF. DES.
....2	410-0065	LUG,TERM #6 RING CRIMP #22 AWG	1	
....2	417-1702	RIGHT ANGLE CRIMP TYPE PLUG,SMB,50 OHM	1	
....2	417-1703	Straight Crimp Type Plug,SMB,50 ohm	1	
....2	601-0022	WIRE,AWG22,BUSS	0.229	
....2	621-1359	CBL,COAX,RG316/U,50 OHM	3	
..1	949-4116	CABLE,FWD PWR,STX COMBINER,3KW/5KW	1	
....2	410-0065	LUG,TERM #6 RING CRIMP #22 AWG	1	
....2	417-1703	Straight Crimp Type Plug,SMB,50 ohm	1	
....2	417-8030	CONN,PLUG,RT ANG,SMA,HEX CRIMP	1	
....2	601-0022	WIRE,AWG22,BUSS	0.229	
....2	621-1359	CBL,COAX,RG316/U,50 OHM	2.5	
..1	959-4005-102	ASSY,STX SPLITTER 2	1	
....2	450-1700	PLUG,HOLE,1/2 NYL BLACK 2643	3	
....2	469-0021	FINGER STOCK,LAIRD 97-550,24 LONG"	0.145	
....2	469-5500	FINGER STOCK,TECH-ETCH 250P37-16-02	1	
....2	471-4255-100	COVER,SPLITTER,STX COMBINER	1	
....2	919-4005-102	ASSY,2-WAY,STX LP PA/COMBINER SPLITTER BOARD	1	
.....3	105-0051	RES, CHIP, 51 OHM, 1W, 5%, 2512	1	R67
.....3	417-0037-001	BNC,R ANGLE PC MTG,SHIELDED	-1	J6 (PLACE PART BACK IN STOCK)
.....3	919-4005-103	ASSY,3-WAY,STX LP PA/COMBINER SPLITTER BOARD(SBCM)	1	
.....4	003-0105	CAP, CER, 1UF, 100V, 1812, 20%, SMD	4	C27, C28, C30, C33
.....4	007-1024	CAP,CER,.001uF,50V,10%,SMD	7	C36, C48, C55, C60, C64, C74, C81
.....4	007-1034	CAP,CER,0.01uF,50V,10%,SMD	4	C50, C68, C70, C75
.....4	007-1034-001	CAP,CER,.01UF,10%,50V,0603,SMD	16	C6, C7, C8, C9, C11, C12, C13, C14, C15, C16, C17, C18, C19, C20, C21, C22
.....4	007-1040-025	CAP,CER,.1UF,+80,-20%,25V,0603,SMD	14	C1, C2, C3, C4, C5, C10, C23, C24, C25, C26, C29, C34, C84, C85
.....4	007-1044	CAP,CER,0.1uF,50V,10%,SMD note	12	C35, C39, C40, C44, C51, C61, C65, C67, C69, C78, C79, C82
.....4	007-1054-001	CAP,CER,1UF,10%,10V,X7R,0805,SMD	1	C47
.....4	007-1075-100	CAP, CER CHIP, 10 UF, 10V, 1206	2	C32, C80
.....4	007-2202-050	CAP,CER,22 PFD,5%,50V,1206,SMD	1	C77
.....4	007-2202-500	CAP,CER,22pF,50V,2%,SMD	1	C56
.....4	007-2702-500	CAP,CER,27pF,50V,2%,SMD	1	C58
.....4	007-3912	CAP,CER,39pF,50V,5%,SMD	1	C62
.....4	007-6800-500	CAP,CER,6.8pF,50V,.25pF,SMD	10	C37, C38, C41, C42, C45, C46, C49, C52, C53, C54
.....4	007-6812	CAP,CER,68pF,50V,2%,SMD	1	C43
.....4	009-1032-050	CAP,CER CHIP,1000PF,50V,5%	1	C63
.....4	070-1065	CAP,TANT,10UF,20V,10%,SMD	4	C31, C59, C66, C73

©2013 Broadcast Electronics

BOM LEVEL	PART NO.	DESCRIPTION	QTY	REF. DES.
.....4	102-0000	RES,CHIP,0 OHM,0805,SMD	12	R43, R46, R47, R49, R50, R130, R131, R132, R134, R136, R137, R143
.....4	102-0100	RES,CHIP,10.0 OHMS,1/10W,1%,SMD	2	R94, R95
.....4	102-1000	RES,CHIP,100 OHMS,1/10W,1%,SMD	6	R1, R2, R34, R38, R111, R146
.....4	102-1001	RES,CHIP,1.00K OHMS,1/10W,1%,SMD	9	R5, R19, R24, R53, R70, R92, R112, R114, R138
.....4	102-1002	RES,CHIP,10.0K OHMS,1/10W,1%,SMD	26	R16, R52, R74, R75, R77, R78, R79, R80, R81, R85, R87, R89, R90, R98, R100, R102, R104, R106, R119, R122, R123, R124, R125, R126, R147, R151
.....4	102-1003	RES,CHIP,100K OHMS,1/10W,1%,SMD	12	R54, R82, R84, R88, R93, R97, R99, R139, R141, R142, R149, R150
.....4	102-1004	RES,CHIP,1.00M OHMS,1/10W,1%,SMD	4	R56, R73, R127, R140
.....4	102-1500	RES,CHIP,150 OHMS,1/10W,1%,SMD	1	R68
.....4	102-1503	RES,CHIP,150K OHMS,1/10W,1%,SMD	2	R83, R144
.....4	102-2000	RES,CHIP,200 OHM,1/10 W,1% SMD	3	R7, R13, R55
.....4	102-2001	RES,CHIP,2.00K OHMS,1/10W,1%,SMD	16	R3, R4, R8, R9, R11, R12, R15, R21, R23, R26, R28, R30, R32, R35, R37, R40
.....4	102-2212	RES,CHIP,22.1K OHMS,1/10W,1%,SMD	1	R121
.....4	102-2214	RES,CHIP,2.21K OHM,1/10W,1%	1	R76
.....4	102-2273	RES,CHIP,2.2M OHM,1/10 W,5%	1	R148
.....4	102-2410	RES,CHIP,243 OHMS,1/10W,1%,0805,SMD	1	R96
.....4	102-2431	RES,CHIP,2.43K OHMS,1/10W,1%,SMD	6	R42, R44, R45, R71, R107, R108
.....4	102-2491	RES,CHIP,2.49K,1/10W,1%,SMD	1	R101
.....4	102-3012	RES,CHIP,30.1K,1/10W,1%,SMD	1	R105
.....4	102-3160	RES,CHIP,3.16K OHMS,1/10W,1%,SMD	1	R59
.....4	102-3323	RES,CHIP,332K OHMS,1/10W,1%,SMD	1	R120
.....4	102-3570	RES,CHIP,357 OHMS,1/10W,1%,SMD	1	R117
.....4	102-4223	RES,CHIP,422k OHM,1%,1/10W,0805,SMD	1	R86
.....4	102-4320	RES,CHIP,432 OHMS,1/10W,1%,SMD	1	R91
.....4	102-5491	RES,CHIP,5.49K,1/10W,1%,SMD	1	R57
.....4	102-6409	RES,CHIP,64.9 OHMS,1/10W,1%,SMD	1	R110
.....4	104-1001	RES,CHIP,1.0 K OHM,1%,1/16W,0603,SMD	3	R58, R116, R118
.....4	105-0018	RES,CHIP,18.2 OHM,1W,1%,2512,SMD	1	R103
.....4	105-0051	RES, CHIP, 51 OHM, 1W, 5%, 2512	7	R60, R61, R62, R63, R64, R65, R66
.....4	105-0294	RES,CHIP,294 OHM,1W,1%,2512,SMD	3	R109, R128, R129
.....4	198-1054	TRMR,10K OHMS,TOP ADJ,SMD (N)	1	R69

©2013 Broadcast Electronics

BOM LEVEL	PART NO.	DESCRIPTION	QTY	REF. DES.
.....4	198-2024	TRMR,2K OHMS,TOP ADJUST,10 TURN,SMD	1	R115
.....4	204-0914	DIODE,SWITCHING,MMBD914LT1,SMD	5	D2, D3, D4, D5, D6
.....4	210-4031	TSTR, BIPOLAR POWER, NPN, NJT4031N, SMD	1	Q14
.....4	210-7805	REG, 5V, 1A, 3 TERMINAL, POSITIVE VOLTAGE, SMD, D-PAK	1	U14
.....4	210-8504	RF POWER TRANSISTOR, PD85004, SMD, SOD-89	1	U11
.....4	216-0339	IC,LM339AM,VOLTAGE COMPARATOR,SMD	1	U12
.....4	216-0830	IC,OP AMP,OPA830,SOT23-5,R/R OUTPUT	1	U16
.....4	216-1963	LINEAR TECH LT1963 1.5 AMP LDO ADJUSTABLE REGULATOR	1	U10
.....4	216-2343	MOSFET,P CHAN,2A,30V,.08 OHM,SOT-23	1	Q6
.....4	216-4013	IC,MC14013BD DUAL D FLIP FLOP,SMD	1	U20
.....4	216-5235	ANALOG DEVICES AD5235 DIGITAL POTS	2	U3, U19
.....4	216-6549	IC, DUAL LVDS DIFFERENTIAL DRIVERS AND RECEIVERS, TSSOP16	1	U1
.....4	216-7002	IC,MOSFET,2N7002LT1,SMD	19	Q1, Q2, Q3, Q4, Q5, Q7, Q8, Q9, Q10, Q11, Q12, Q13, Q15, Q16, Q17, Q18, Q19, Q20, Q21
.....4	216-7400	IC,SN74AHCT1G00DBV,2-INPUT POS NAND,DBV,SMD	1	U7
.....4	216-7414-001	IC, SCHMITT TRIGGERED SINGLE GATE INVERTER,SC-70	5	U4, U6, U9, U17, U18
.....4	216-7490	ANALOG DEVICES AD7490 16 CHAN A/D	1	U2
.....4	216-8574	IC, ADI AD8574 4CHANNEL R/R OP AMP	1	U8
.....4	220-7425	IC, COMPARATOR, LMV7219, 7NS, 2.5-5V, R-R	1	U21
.....4	221-8361	IC, TRUE AVERAGE POWER DETECTOR	1	U15
.....4	224-0324	IC,LM324,QUAD OP-AMP,SMD	1	U13
.....4	224-4000	GATE, SINGLE, XOR, 2 INPUT, 8NS TPD	1	U5
.....4	231-0136	IC,VOLT REF,2.5V,8-PIN SOIC	1	D1
.....4	320-0603	LED GREEN SMD	4	DS1, DS2, DS3, DS4
.....4	340-0004	SW,JUMPER PROGRAMMABLE	2	P4, P5
.....4	350-188	INDUCTOR, 1210 1uH CHIP	2	L6, L7
.....4	366-0010-010	INDUCTOR,10 NH,5%,0805CS-100XJB,0805,SMD	1	L8
.....4	366-0068-200	IND,68NH,CER WW,0805,5%,SMD	1	L9
.....4	366-0100	IND,100NH LAMINATED CER,0805,SMD	1	L10
.....4	366-0180-001	INDUCTOR, 180nH, 10%, SMD, 1008	5	L1, L2, L3, L4, L5
.....4	413-0603	Chip,Test Point 0603 SMD	3	TP1, TP2, TP3
.....4	413-1206	CHIP,TEST POINT,1206,SMD	1	TP6
.....4	413-1520	TERM,TURRET SINGLE, .109 L, .078" BASE"	1	TP5
.....4	417-0037-001	BNC,R ANGLE PC MTG,SHIELDED	2	J6, J7
.....4	417-0200	CONN,HEADER 20 PIN	0.2	J5, J8
.....4	417-1050	.100,10 pin double row terminal strip"	1	J4
.....4	417-3120	CONN, BNC RIGHT ANGLE DUAL PORT PCB MOUNT/SHIELDED	1	J2
.....4	417-4604	CONN, PCB MOUNTED RJ45 RIGHT ANGLE WITH LEDS	1	J1

©2013 Broadcast Electronics

BOM LEVEL	PART NO.	DESCRIPTION	QTY	REF. DES.
.....4	418-5026	CONN, 26 PIN, MALE, SMT, 0.050, KEYED, WITH LATCHES"	1	J11
.....4	519-4005-103	PCB, STX LP COMBINER SPLITTER BOARD	1	
..1	959-4015-002	ASSY,STX RF INPUT 2	1	
....2	131-5080	RES,50 OHM,800W,2 PF,5%,FLANGED	2	R1, R2
....2	360-4211-200	COIL, 14GA, 9T, 200nH, STX 2KW	1	
.....3	410-1552	LUG,TERM #8 RING CRIMP 16-22	1	
.....3	611-5000	TUB,HT SHK 1/2	1.25	
.....3	640-1400	WIRE,14GA,MAGNET	0.013	
....2	420-6106	SCREW,6-32X.375,S.S. PH	8	
....2	420-6506	SCREW,6-32X.375,S.S. PH FH	6	
....2	422-6107	SCREW,SEMS 6-32 X 7/16 PAN PH.ST."	5	
....2	423-6002	#6 LOCK SPLIT	8	
....2	423-6011	#6 FLAT .310 X .160 X .030	8	
....2	427-0067	CONNECTOR, N, THK PCB, STRAIGHT, PNL MTG	2	J1, J2
....2	440-0301	STANDOFF, 3/16 .060 SPACER"	1	
....2	441-4202	STOFF, COPPER, .375D x 1.000" 2.000 " "		
....2	441-5504	STOFF,SS 1/4 HEX X 7/16" LONG,MALE-FEMALE 8-32"	5	
....2	455-4000-100	HEATSINK,COMBINER,STX	1	
....2	455-4001-100	PLATE,ALUMINUM,STX 3/5 KW	1	
....2	463-4501	CONNECTOR, .060 COPPER STAR	1	
....2	519-4015	PCB, STX LP PA/COMBINER RF INPUT BOARD	1	
....2	919-4025	ASSY, STX LP PA/COMBINER BACKER BOARD(SBCM)	1	
.....3	007-0020-006	CAP,20pF,5%,50v,SMD,0603	1	C7
.....3	007-1024	CAP,CER,.001uF,50V,10%,SMD	6	C4, C6, C10, C12, C16, C18
.....3	007-1044	CAP,CER,0.1uF,50V,10%,SMD note	8	C1, C2, C3, C8, C9, C13, C14, C15
.....3	102-0000	RES,CHIP,0 OHM,0805,SMD	1	R6
.....3	102-1000	RES,CHIP,100 OHMS,1/10W,1%,SMD	6	R2, R3, R8, R9, R14, R15
.....3	102-1002	RES,CHIP,10.0K OHMS,1/10W,1%,SMD	4	R17, R20, R21, R22
.....3	102-1214	RES, CHIP, 1.21K OHM, 1/10W, 1%	3	R5, R12, R18
.....3	102-2214	RES,CHIP,2.21K OHM,1/10W,1%	3	R1, R7, R13
.....3	102-4321	RES,CHIP,4.32K OHMS,1/10W,1%,SMD	4	R4, R10, R16, R19
.....3	204-0914	DIODE,SWITCHING,MMBD914LT1,SMD	3	D1, D2, D3
.....3	216-0830	IC,OP AMP,OPA830,SOT23-5,R/R OUTPUT	3	U2, U5, U7
.....3	216-1490	IC,OP AMP,LT1490,DUAL,R/R I/O,SMT	2	U3, U8
.....3	220-0035	IC,LM35DZ CELSIUS TEMP SENSOR	3	U1, U4, U6
.....3	413-1206	CHIP,TEST POINT,1206,SMD	3	TP1, TP2, TP3
.....3	417-2838	HEADER 4-PIN .100 R.ANGLE LOCKING"	1	J1
.....3	519-4025	PCB, STX LP PA/COMBINER BACKER BOARD	1	

©2013 Broadcast Electronics

BOM LEVEL	PART NO.	DESCRIPTION	QTY	REF. DES.
0	959-4301-100	ASSY, SPLITTER/COMBINER, FM, STX LP, 3KW		
..1	324-2500	LIGHTPIPE,0.197 DIA,0.5 LONG, PANEL MT.	4	
..1	349-0020	SWITCH, ROCKER, DPST, 20A	1	
..1	380-9006-001	FAN,WITH CONNECTOR,COUNTER ROTATING,12V DC,120 MM SQ X 76 MM	1	
....2	380-6307	FINGER GUARD,FAN,4.125 CENTERS	1	
....2	380-9006	FAN,COUNTER ROTATING,12V DC,120MM X 76MM	1	
....2	418-1105	CONN,PLUG,10-PIN,5X2,SAMTEC MINI-MATE	1	
....2	418-2024	PIN,FEMALE CRIMP,.100,20-24 AWG,GOLD,SAMTEC"	8	
..1	400-0014	GROMMET,3/8IDX5/8ODFOR7/16HOLE	1	
..1	400-0207	STRIP,QUIET SHIELD,.250x.375""	1.1	
..1	400-4200	GASKET, EXTRD EMI SHIELD SILCON,ALUM,SILVR	5.25	
..1	402-0000	TY-RAP	9	
..1	402-0001	TY-RAP,T+B TY24M,1-1/4 DIA	2	
..1	402-0833	CLAMP,CBL,1/4	2	
..1	409-0125	SCREW,POLYPRO, 4-40 x 1-1/2,PAN HEAD SLOT	4	
..1	411-7086	TERM BLK FEED-THRU 1-4MM GRAY	2	
..1	411-7866	TERM BLK,FEED-THRU,1-4MM GRN/YEL	1	
..1	420-0500	SCREW,10-32X.375,BR PH	2	
..1	420-3005	SCREW,5/16-18X1.000,S.S. BOLT	4	
..1	420-6110	SCREW,6-32X.625,S.S. PH	4	
..1	420-8106	SCREW,8-32X.375,S.S. PHH	5	
..1	420-8121	SCREW,8-32X.375,BR PH	3	
..1	420-8706	SCREW,8-32X.375,BRASS THUMB	1	
..1	420-9720	RETAINER,NUT,OD:0.26,FITS SHAFT 5/32""	4	
..1	421-6008	6-32 KEP NUT	2	
..1	421-8028	NUT,JAM,1/2-28 UNEF-2B	1	
..1	422-0110	SCREW,10-32 X 5/8,PPH,SEM,STEEL,ZINC PLATING"	4	
..1	422-6106	SCREW,SEMS 6-32 X 3/8 PAN PH. ST."	36	
..1	423-0007	#10 LOCK INT TOOTH	2	
..1	423-6002	#6 LOCK SPLIT	4	
..1	423-8002	#8 LOCK SPLIT	5	
..1	423-8006	#8 LOCK INT TOOTH	4	
..1	423-9002	WASH,INT TOOTH,1/2	1	
..1	427-0009-300	CONNECTOR,MODIFIED,OUTPUT,STX 3/5 KW	1	
..1	427-0010	ASSY,ADAPTOR 1 5/8 FLANGED	1	
..1	441-4801	STOFF, 1/2 SNAP LOCK NYLON .062 PCB"	8	
..1	441-6108	STOFF,MF,#6 X .500L,BRASS (NOTE)	13	
..1	450-1704	PLUG,HOLE,.687 NYL BLACK 2673	2	
..1	469-0021	FINGER STOCK,LAIRD 97-550,24 LONG"	3.333	
..1	469-0366	FINGER STOCK (NOTE!!!!!)	11	
..1	471-4211	FRONT PANEL, STX LP,3KW COMBINER	1	
..1	471-4225	SAFETY SHIELD FOR ELECTRICAL SOURCE STX LP	1	
..1	471-4250-100	WELDMENT,CHASSIS,STX COMBINER	1	

©2013 Broadcast Electronics

BOM LEVEL	PART NO.	DESCRIPTION	QTY	REF. DES.
..1	471-4253-100	ENCLOSURE,STX COMBINER	1	
..1	471-4256-100	COVER,INNER,STX COMBINER	1	
..1	471-4257-100	COVER,TOP,STX COMBINER	1	
..1	471-4261	STRAP,FAN,STX COMBINER	2	
..1	486-7150	HANDLE, 4 X 1.375", BRASS, CHROME PLATED, #10-32 THREADS"	2	
..1	510-273	Foam tape 1/2 thick X 3/4 wide X 17' LONG	0.083	
..1	540-1012-100	POWER SUPPLY, 12V 65W AC/DC CONVERTER 2X4" STX LP"	1	
..1	540-1012-501	POWER SUPPLY 12V 80/100W AC/DC 2X4IN	1	
..1	594-0073	LABEL,WARNING ROTATING FANS	1	
..1	594-0505	LABEL, WARNING-ONLY AUTHORIZED PERSONNEL	2	
..1	849-2010-100	CBL,ASSY,.050 DOUBLE ROW 10 PIN FEMALE IDC ASSEMBLY,28 INCH	1	
..1	849-2526	CBL,ASSY,.050 DOUBLE ROW 26 PIN FEMALE IDC ASSY,25.0 INCH	1	
..1	919-4065-001	ASSY, STX LP PA/COMBINER 3WAY COMBINER BOARD	1	
....2	007-1012	CAP,CER,10pF,50V,2%,SMD	3	C7, C14, C21
....2	007-1201	CAP,CER,12PF,50V,2%,SMD	6	C2, C3, C9, C10, C16, C17
....2	007-1512	CAP,CER,15pF,50V,2%,SMD	3	C6, C13, C20
....2	007-2200	CAP,CER,2.2pF,50V,.25pF,SMD	3	C5, C12, C19
....2	007-2202-050	CAP,CER,22 PFD,5%,50V,1206,SMD	3	C4, C11, C18
....2	007-3300	CAP,CER,3.3PF,50V,.25pF,SMD	3	C22, C23, C24
....2	007-3312	CAP,CER,33pF,50V,2%,SMD	3	C1, C8, C15
....2	046-0047	CAP,PTFE,RF,4.7PF,1000V,+/-0.5PF,SMT	1	C25
....2	091-1511	CAP,TRIMMER,3-10 PF,NPO,25V,SMD	1	C27
....2	105-0018	RES,CHIP,18.2 OHM,1W,1%,2512,SMD	3	R2, R10, R18
....2	105-0075	Chip Res,75 ohm 1W 1% SMD 2512	3	R1, R9, R17
....2	105-0102	RES, CHIP, 1K OHM, 1W, 5%, 2512	7	R5, R6, R13, R14, R21, R22, R30
....2	105-0294	RES,CHIP,294 OHM,1W,1%,2512,SMD	6	R3, R4, R11, R12, R19, R20
....2	105-0301	RES, CHIP, 300 OHM, 5%, 1W, 2512, SMD	9	R7, R8, R15, R16, R23, R24, R26, R28, R29
....2	178-5045	RES,TRMR,5K,20T,VERT	2	R25, R27
....2	360-4210	COIL,12 GA,9.45T,280nH	1	L15
.....3	640-1200	WIRE,12GA,MAGNET	0.026	
....2	366-0120-100	IND, 120NH, AIR, 5%, SMD, 1812	9	L1, L2, L3, L4, L5, L6, L7, L8, L9
....2	417-0265	CONN,BNC,JACK,THREADED,PC EDGE MOUNT,LOW PROFILE	1	J1
....2	417-1701	STRAIGHT JACK RECEPTACLE,SMB PCB MOUNT 50 OHM	2	J2, J3
....2	426-0000	PEM NUT,#10-32 KFS2-032	2	F1, F2
....2	519-4065-001	PCB, STX LP PA/COMBINER 3WAY COMBINER BOARD	1	PCB
..1	919-4075	ASSY, STX LP PA/COMBINER LED BOARD (SBCM)	1	

©2013 Broadcast Electronics

BOM LEVEL	PART NO.	DESCRIPTION	QTY	REF. DES.
....2	007-1044	CAP,CER,0.1uF,50V,10%,SMD note	4	C2, C3, C6, C9
....2	007-3923	CAP,CER,390pF,100V,5%,SMD	2	C4, C8
....2	007-4702-500	CAP,CER,47pF,50V,2%,SMD	2	C5, C7
....2	070-1065	CAP,TANT,10UF,20V,10%,SMD	1	C1
....2	102-0000	RES,CHIP,0 OHM,0805,SMD	5	R21, R24, R25, R26, R27
....2	102-0100	RES,CHIP,10.0 OHMS,1/10W,1%,SMD	1	R22
....2	102-1001	RES,CHIP,1.00K OHMS,1/10W,1%,SMD	2	R18, R20
....2	102-1002	RES,CHIP,10.0K OHMS,1/10W,1%,SMD	2	R23, R30
....2	102-1003	RES,CHIP,100K OHMS,1/10W,1%,SMD	4	R6, R11, R13, R16
....2	102-1214	RES, CHIP, 1.21K OHM, 1/10W, 1%	1	R3
....2	102-2001	RES,CHIP,2.00K OHMS,1/10W,1%,SMD	1	R29
....2	102-2210	RES,CHIP,221 OHMS,1/10W,1%,SMD	1	R2
....2	102-4021	RES,CHIP,4.02K OHMS,1/10W,1%,SMD	1	R19
....2	102-7150	RES,CHIP,715 OHMS,1/10W,1%,SMD	9	R4, R7, R8, R9, R10, R12, R14, R15, R17
....2	216-7002	IC,MOSFET,2N7002LT1,SMD	5	Q1, Q2, Q3, Q4, Q5
....2	220-0035	IC,LM35DZ CELSIUS TEMP SENSOR	1	U3
....2	221-0358-001	DUAL OP AMP, SMD, SOIC8	1	U2
....2	231-3170	VR,LM317,SMD	1	U1
....2	325-0807	LED,DUAL,SUPER RED/GRN,SMD,0807 (note)	5	DS1, DS2, DS3, DS4, DS5
....2	340-0004	SW,JUMPER PROGRAMMABLE	1	P1
....2	417-0308	CONN,JACK,3-PIN,SMD	1	J2
....2	418-451	Diode, SMT, Zener, 5.1V Motorola BZX84C5V1LT1	1	D1
....2	418-5010	CONN, 10 PIN, MALE, SMT, 0.050, KEYED, WITH LATCHES"	1	J1
....2	519-4075	PCB, STX LP PA/COMBINER LED BOARD	1	
..1	919-4095-001	ASSY, STX LP COMBINER FILTER BOAR (SBCM)	1	
....2	007-0100-035	CAP, LYTIC, 100UF, 35V, 20%, LOW IMP, SMD	1	C6
....2	007-0102	CAP,CER,CHIP,1000pF,50V,5%,SMD	4	C11, C12, C17, C18
....2	007-1044	CAP,CER,0.1uF,50V,10%,SMD note	10	C1, C4, C7, C8, C10, C13, C14, C16, C19, C21
....2	007-1075-100	CAP, CER CHIP, 10 UF, 10V, 1206	2	C9, C15
....2	070-1065	CAP,TANT,10UF,20V,10%,SMD	3	C3, C5, C20
....2	102-0000	RES,CHIP,0 OHM,0805,SMD	2	R9, R25
....2	102-0152	RES,CHIP,1.5K OHM,0.1%,1/10W,0805,SMD	1	R20
....2	102-1000	RES,CHIP,100 OHMS,1/10W,1%,SMD	2	R12, R18
....2	102-1001	RES,CHIP,1.00K OHMS,1/10W,1%,SMD	4	R11, R13, R14, R19
....2	102-1002	RES,CHIP,10.0K OHMS,1/10W,1%,SMD	1	R3
....2	102-1200	RES,CHIP,121 OHMS,1/10W,1%,SMD (NOTE)	2	R2, R6
....2	102-2001	RES,CHIP,2.00K OHMS,1/10W,1%,SMD	2	R17, R23
....2	102-3012	RES,CHIP,30.1K,1/10W,1%,SMD	1	R1
....2	102-3570	RES,CHIP,357 OHMS,1/10W,1%,SMD	1	R10
....2	102-6409	RES,CHIP,64.9 OHMS,1/10W,1%,SMD	2	R15, R21
....2	102-7521	RES,CHIP,75 OHMS,1/10W,1%,SMD	4	R4, R5, R7, R8
....2	178-5045	RES,TRMR,5K,20T,VERT	2	R16, R22
....2	216-0830	IC,OP AMP,OPA830,SOT23-5,R/R OUTPUT	2	U1, U3
....2	221-8361	IC, TRUE AVERAGE POWER DETECTOR	2	U2, U4

©2013 Broadcast Electronics

BOM LEVEL	PART NO.	DESCRIPTION	QTY	REF. DES.
....2	320-0603	LED GREEN SMD	2	DS1, DS2
....2	350-197	INDUCTOR, SMT, POWER, 1uH	2	L1, L2
....2	417-0700	CONN,PCB MT,2PIN	1	J8
....2	417-0701	CONN,SMA FEMALE PC MOUNT	1	J3
....2	417-1102	CONN,HEADER,VERT,4-PIN,2X2,SAMTEC MINI-MATE	1	J6
....2	417-1105	CONN,HEADER,VERT,10-PIN,5X2,SAMTEC MINI-MATE	1	J4
....2	417-1701	STRAIGHT JACK RECEPTACLE,SMB PCB MOUNT 50 OHM	1	J5
....2	418-0255	CONN,MALE,4PIN	1	J2
....2	418-5010	CONN, 10 PIN, MALE, SMT, 0.050, KEYED, WITH LATCHES"	1	J7
....2	418-5026	CONN, 26 PIN, MALE, SMT, 0.050, KEYED, WITH LATCHES"	1	J1
....2	519-4095-001	PCB, STX LP COMBINER FILTER BOARD	1	PCB
..1	949-4101-100	CABLE,12GA BLUE,6 LG,STRIP-PUSH ON (SBCM)	1	
....2	410-0050	LUG,TERM,10-12GA,FEMSPADE	1	
....2	601-1202-006	WIRE,AWG 12,STRANDED,LIGHT BLUE	0.5	
....2	611-3750	TUB,HT SHK,3/8	0.104	
..1	949-4101-200	CABLE,12GA BROWN,6 LG,STRIP-PUSH ON (SBCM)	1	
....2	410-0050	LUG,TERM,10-12GA,FEMSPADE	1	
....2	601-1202-001	WIRE,AWG 12,STRANDED,BROWN	0.5	
....2	611-3750	TUB,HT SHK,3/8	0.104	
..1	949-4114-100	HARNESS,MAIN,STX COMBINER WITH -501 PS (SBCM)	1	
....2	410-0065	LUG,TERM #6 RING CRIMP #22 AWG	1	
....2	410-1421	LUG,QUICK DISCONNECT #18-22	2	
....2	410-2478	CRIMP TERMINAL,AMP 640707-1	10	
....2	417-0053	SKT,CONN 641294-1 AMP	6	
....2	417-0306	HSNG,3 POS,SL-156	2	
....2	417-0606	HSNG,6 POS,SL-156	1	
....2	417-2806	CONNECTOR, HOUSING, 4-PIN .001" 1.000 " "		
....2	417-2816	PIN, CRIMP .100,22-24 GA"	4	
....2	417-4025	HOUSING,4-PIN,AMP 640250-4	1	
....2	418-0240	PLUG,FEM,4PIN	1	
....2	418-0701	CONN,HOUSING,2 PIN	1	
....2	418-1102	CONN,PLUG,4-PIN,2X2,SAMTEC MINI-MATE	1	
....2	418-2024	PIN,FEMALE CRIMP,.100,20-24 AWG,GOLD,SAMTEC"	4	
....2	601-1800-054	WIRE,AWG 18,STRANDED,GREEN/YELLOW	1.917	
....2	601-2209	WIRE,AWG22,7/30 WHT	18.167	
....2	611-2500	TUB,HT SHK,1/4	0.167	
....2	611-3750	TUB,HT SHK,3/8	0.208	
..1	949-4115	CABLE,RFL PWR,STX COMBINER,3KW/5KW	1	
....2	410-0065	LUG,TERM #6 RING CRIMP #22 AWG	1	
....2	417-1702	RIGHT ANGLE CRIMP TYPE PLUG,SMB,50 OHM	1	
....2	417-1703	Straight Crimp Type Plug,SMB,50 ohm	1	

©2013 Broadcast Electronics

BOM LEVEL	PART NO.	DESCRIPTION	QTY	REF. DES.
....2	601-0022	WIRE,AWG22,BUSS	0.229	
....2	621-1359	CBL,COAX,RG316/U,50 OHM	3	
..1	949-4116	CABLE,FWD PWR,STX COMBINER,3KW/5KW	1	
....2	410-0065	LUG,TERM #6 RING CRIMP #22 AWG	1	
....2	417-1703	Straight Crimp Type Plug,SMB,50 ohm	1	
....2	417-8030	CONN,PLUG,RT ANG,SMA,HEX CRIMP	1	
....2	601-0022	WIRE,AWG22,BUSS	0.229	
....2	621-1359	CBL,COAX,RG316/U,50 OHM	2.5	
..1	959-4005-103	ASSY, STX SPLITTER 3	1	
....2	450-1700	PLUG,HOLE,1/2 NYL BLACK 2643	2	
....2	469-0021	FINGER STOCK,LAIRD 97-550,24 LONG"	0.145	
....2	469-5500	FINGER STOCK,TECH-ETCH 250P37-16-02	0.5	
....2	471-4255-100	COVER,SPLITTER,STX COMBINER	1	
....2	919-4005-103	ASSY,3-WAY,STX LP PA/COMBINER SPLITTER BOARD(SBCM)	1	
.....3	003-0105	CAP, CER, 1UF, 100V, 1812, 20%, SMD	4	C27, C28, C30, C33
.....3	007-1024	CAP,CER,.001uF,50V,10%,SMD	7	C36, C48, C55, C60, C64, C74, C81
.....3	007-1034	CAP,CER,0.01uF,50V,10%,SMD	4	C50, C68, C70, C75
.....3	007-1034-001	CAP,CER,.01UF,10%,50V,0603,SMD	16	C6, C7, C8, C9, C11, C12, C13, C14, C15, C16, C17, C18, C19, C20, C21, C22
.....3	007-1040-025	CAP,CER,.1UF,+80,-20%,25V,0603,SMD	14	C1, C2, C3, C4, C5, C10, C23, C24, C25, C26, C29, C34, C84, C85
.....3	007-1044	CAP,CER,0.1uF,50V,10%,SMD note	12	C35, C39, C40, C44, C51, C61, C65, C67, C69, C78, C79, C82
.....3	007-1054-001	CAP,CER,1UF,10%,10V,X7R,0805,SMD	1	C47
.....3	007-1075-100	CAP, CER CHIP, 10 UF, 10V, 1206	2	C32, C80
.....3	007-2202-050	CAP,CER,22 PFD,5%,50V,1206,SMD	1	C77
.....3	007-2202-500	CAP,CER,22pF,50V,2%,SMD	1	C56
.....3	007-2702-500	CAP,CER,27pF,50V,2%,SMD	1	C58
.....3	007-3912	CAP,CER,39pF,50V,5%,SMD	1	C62
.....3	007-6800-500	CAP,CER,6.8pF,50V,.25pF,SMD	10	C37, C38, C41, C42, C45, C46, C49, C52, C53, C54
.....3	007-6812	CAP,CER,68pF,50V,2%,SMD	1	C43
.....3	009-1032-050	CAP,CER CHIP,1000PF,50V,5%	1	C63
.....3	070-1065	CAP,TANT,10UF,20V,10%,SMD	4	C31, C59, C66, C73
.....3	102-0000	RES,CHIP,0 OHM,0805,SMD	12	R43, R46, R47, R49, R50, R130, R131, R132, R134, R136, R137, R143
.....3	102-0100	RES,CHIP,10.0 OHMS,1/10W,1%,SMD	2	R94, R95
.....3	102-1000	RES,CHIP,100 OHMS,1/10W,1%,SMD	6	R1, R2, R34, R38, R111, R146
.....3	102-1001	RES,CHIP,1.00K OHMS,1/10W,1%,SMD	9	R5, R19, R24, R53, R70, R92, R112, R114, R138

©2013 Broadcast Electronics

BOM LEVEL	PART NO.	DESCRIPTION	QTY	REF. DES.
.....3	102-1002	RES,CHIP,10.0K OHMS,1/10W,1%,SMD	26	R16, R52, R74, R75, R77, R78, R79, R80, R81, R85, R87, R89, R90, R98, R100, R102, R104, R106, R119, R122, R123, R124, R125, R126, R147, R151
.....3	102-1003	RES,CHIP,100K OHMS,1/10W,1%,SMD	12	R54, R82, R84, R88, R93, R97, R99, R139, R141, R142, R149, R150
.....3	102-1004	RES,CHIP,1.00M OHMS,1/10W,1%,SMD	4	R56, R73, R127, R140
.....3	102-1500	RES,CHIP,150 OHMS,1/10W,1%,SMD	1	R68
.....3	102-1503	RES,CHIP,150K OHMS,1/10W,1%,SMD	2	R83, R144
.....3	102-2000	RES,CHIP,200 OHM,1/10 W,1% SMD	3	R7, R13, R55
.....3	102-2001	RES,CHIP,2.00K OHMS,1/10W,1%,SMD	16	R3, R4, R8, R9, R11, R12, R15, R21, R23, R26, R28, R30, R32, R35, R37, R40
.....3	102-2212	RES,CHIP,22.1K OHMS,1/10W,1%,SMD	1	R121
.....3	102-2214	RES,CHIP,2.21K OHM,1/10W,1%	1	R76
.....3	102-2273	RES,CHIP,2.2M OHM,1/10 W,5%	1	R148
.....3	102-2410	RES,CHIP,243 OHMS,1/10W,1%,0805,SMD	1	R96
.....3	102-2431	RES,CHIP,2.43K OHMS,1/10W,1%,SMD	6	R42, R44, R45, R71, R107, R108
.....3	102-2491	RES,CHIP,2.49K,1/10W,1%,SMD	1	R101
.....3	102-3012	RES,CHIP,30.1K,1/10W,1%,SMD	1	R105
.....3	102-3160	RES,CHIP,3.16K OHMS,1/10W,1%,SMD	1	R59
.....3	102-3323	RES,CHIP,332K OHMS,1/10W,1%,SMD	1	R120
.....3	102-3570	RES,CHIP,357 OHMS,1/10W,1%,SMD	1	R117
.....3	102-4223	RES,CHIP,422k OHM,1%,1/10W,0805,SMD	1	R86
.....3	102-4320	RES,CHIP,432 OHMS,1/10W,1%,SMD	1	R91
.....3	102-5491	RES,CHIP,5.49K,1/10W,1%,SMD	1	R57
.....3	102-6409	RES,CHIP,64.9 OHMS,1/10W,1%,SMD	1	R110
.....3	104-1001	RES,CHIP,1.0 K OHM,1%,1/16W,0603,SMD	3	R58, R116, R118
.....3	105-0018	RES,CHIP,18.2 OHM,1W,1%,2512,SMD	1	R103
.....3	105-0051	RES, CHIP, 51 OHM, 1W, 5%, 2512	7	R60, R61, R62, R63, R64, R65, R66
.....3	105-0294	RES,CHIP,294 OHM,1W,1%,2512,SMD	3	R109, R128, R129
.....3	198-1054	TRMR,10K OHMS,TOP ADJ,SMD (N)	1	R69
.....3	198-2024	TRMR,2K OHMS,TOP ADJUST,10 TURN,SMD	1	R115
.....3	204-0914	DIODE,SWITCHING,MMBD914LT1,SMD	5	D2, D3, D4, D5, D6
.....3	210-4031	TSTR, BIPOLAR POWER, NPN, NJT4031N, SMD	1	Q14
.....3	210-7805	REG, 5V, 1A, 3 TERMINAL, POSITIVE VOLTAGE, SMD, D-PAK	1	U14
.....3	210-8504	RF POWER TRANSISTOR, PD85004, SMD, SOD-89	1	U11
.....3	216-0339	IC,LM339AM,VOLTAGE COMPARATOR,SMD	1	U12
.....3	216-0830	IC,OP AMP,OPA830,SOT23-5,R/R OUTPUT	1	U16

©2013 Broadcast Electronics

BOM LEVEL	PART NO.	DESCRIPTION	QTY	REF. DES.
.....3	216-1963	LINEAR TECH LT1963 1.5 AMP LDO ADJUSTABLE REGULATOR	1	U10
.....3	216-2343	MOSFET,P CHAN,2A,30V,.08 OHM,SOT-23	1	Q6
.....3	216-4013	IC,MC14013BD DUAL D FLIP FLOP,SMD	1	U20
.....3	216-5235	ANALOG DEVICES AD5235 DIGITAL POTS	2	U3, U19
.....3	216-6549	IC, DUAL LVDS DIFFERENTIAL DRIVERS AND RECEIVERS, TSSOP16	1	U1
.....3	216-7002	IC,MOSFET,2N7002LT1,SMD	19	Q1, Q2, Q3, Q4, Q5, Q7, Q8, Q9, Q10, Q11, Q12, Q13, Q15, Q16, Q17, Q18, Q19, Q20, Q21
.....3	216-7400	IC,SN74AHCT1G00DBV,2-INPUT POS NAND,DBV,SMD	1	U7
.....3	216-7414-001	IC, SCHMITT TRIGGERED SINGLE GATE INVERTER,SC-70	5	U4, U6, U9, U17, U18
.....3	216-7490	ANALOG DEVICES AD7490 16 CHAN A/D	1	U2
.....3	216-8574	IC, ADI AD8574 4CHANNEL R/R OP AMP	1	U8
.....3	220-7425	IC, COMPARATOR, LMV7219, 7NS, 2.5-5V, R-R	1	U21
.....3	221-8361	IC, TRUE AVERAGE POWER DETECTOR	1	U15
.....3	224-0324	IC,LM324,QUAD OP-AMP,SMD	1	U13
.....3	224-4000	GATE, SINGLE, XOR, 2 INPUT, 8NS TPD	1	U5
.....3	231-0136	IC,VOLT REF,2.5V,8-PIN SOIC	1	D1
.....3	320-0603	LED GREEN SMD	4	DS1, DS2, DS3, DS4
.....3	340-0004	SW,JUMPER PROGRAMMABLE	2	P4, P5
.....3	350-188	INDUCTOR, 1210 1uH CHIP	2	L6, L7
.....3	366-0010-010	INDUCTOR,10 NH,5%,0805CS-100XJB,0805,SMD	1	L8
.....3	366-0068-200	IND,68NH,CER WW,0805,5%,SMD	1	L9
.....3	366-0100	IND,100NH LAMINATED CER,0805,SMD	1	L10
.....3	366-0180-001	INDUCTOR, 180nH, 10%, SMD, 1008	5	L1, L2, L3, L4, L5
.....3	413-0603	Chip,Test Point 0603 SMD	3	TP1, TP2, TP3
.....3	413-1206	CHIP,TEST POINT,1206,SMD	1	TP6
.....3	413-1520	TERM,TURRET SINGLE, .109 L, .078" BASE"	1	TP5
.....3	417-0037-001	BNC,R ANGLE PC MTG,SHIELDED	2	J6, J7
.....3	417-0200	CONN,HEADER 20 PIN	0.2	J5, J8
.....3	417-1050	.100,10 pin double row terminal strip"	1	J4
.....3	417-3120	CONN, BNC RIGHT ANGLE DUAL PORT PCB MOUNT/SHIELDED	1	J2
.....3	417-4604	CONN, PCB MOUNTED RJ45 RIGHT ANGLE WITH LEDS	1	J1
.....3	418-5026	CONN, 26 PIN, MALE, SMT, 0.050, KEYED, WITH LATCHES"	1	J11
.....3	519-4005-103	PCB, STX LP COMBINER SPLITTER BOARD	1	
..1	959-4015-003	ASSY,STX RF INPUT 3	1	
....2	131-5080	RES,50 OHM,800W,2 PF,5%,FLANGED	3	R2, R3, R4
....2	360-4211	COIL,14 GA,7.65T, 130nH	1	
.....3	410-1552	LUG,TERM #8 RING CRIMP 16-22	1	
.....3	611-5000	TUB,HT SHK 1/2	1.25	
.....3	640-1400	WIRE,14GA,MAGNET	0.012	
....2	420-6106	SCREW,6-32X.375,S.S. PH	12	

©2013 Broadcast Electronics

BOM LEVEL	PART NO.	DESCRIPTION	QTY	REF. DES.
....2	420-6506	SCREW,6-32X.375,S.S. PH FH	6	
....2	422-6107	SCREW,SEMS 6-32 X 7/16 PAN PH.ST."	5	
....2	423-6002	#6 LOCK SPLIT	12	
....2	423-6011	#6 FLAT .310 X .160 X .030	12	
....2	427-0067	CONNECTOR, N, THK PCB, STRAIGHT, PNL MTG	3	J2, J3, J4
....2	440-0301	STANDOFF, 3/16 .060 SPACER"	1	
....2	441-4202	STOFF, COPPER, .375D x 1.000" 3.000 " "		
....2	441-5504	STOFF,SS 1/4 HEX X 7/16" LONG,MALE-FEMALE 8-32"	5	
....2	455-4000-100	HEATSINK,COMBINER,STX	1	
....2	455-4001-100	PLATE,ALUMINUM,STX 3/5 KW	1	
....2	463-4501	CONNECTOR, .060 COPPER STAR	1	
....2	519-4015	PCB, STX LP PA/COMBINER RF INPUT BOARD	1	
....2	919-4025	ASSY, STX LP PA/COMBINER BACKER BOARD(SBCM)	1	
.....3	007-0020-006	CAP,20pF,5%,50v,SMD,0603	1	C7
.....3	007-1024	CAP,CER,.001uF,50V,10%,SMD	6	C4, C6, C10, C12, C16, C18
.....3	007-1044	CAP,CER,0.1uF,50V,10%,SMD note	8	C1, C2, C3, C8, C9, C13, C14, C15
.....3	102-0000	RES,CHIP,0 OHM,0805,SMD	1	R6
.....3	102-1000	RES,CHIP,100 OHMS,1/10W,1%,SMD	6	R2, R3, R8, R9, R14, R15
.....3	102-1002	RES,CHIP,10.0K OHMS,1/10W,1%,SMD	4	R17, R20, R21, R22
.....3	102-1214	RES, CHIP, 1.21K OHM, 1/10W, 1%	3	R5, R12, R18
.....3	102-2214	RES,CHIP,2.21K OHM,1/10W,1%	3	R1, R7, R13
.....3	102-4321	RES,CHIP,4.32K OHMS,1/10W,1%,SMD	4	R4, R10, R16, R19
.....3	204-0914	DIODE,SWITCHING,MMBD914LT1,SMD	3	D1, D2, D3
.....3	216-0830	IC,OP AMP,OPA830,SOT23-5,R/R OUTPUT	3	U2, U5, U7
.....3	216-1490	IC,OP AMP,LT1490,DUAL,R/R I/O,SMT	2	U3, U8
.....3	220-0035	IC,LM35DZ CELSIUS TEMP SENSOR	3	U1, U4, U6
.....3	413-1206	CHIP,TEST POINT,1206,SMD	3	TP1, TP2, TP3
.....3	417-2838	HEADER 4-PIN .100 R.ANGLE LOCKING"	1	J1
.....3	519-4025	PCB, STX LP PA/COMBINER BACKER BOARD	1	

©2013 Broadcast Electronics

BOM LEVEL	PART NO.	DESCRIPTION	QTY	REF. DES.
0	959-4501-100	ASSY, SPLITTER/COMBINER, FM, STX LP, 5KW		
..1	324-2500	LIGHTPIPE,0.197 DIA,0.5 LONG, PANEL MT.	4	
..1	349-0020	SWITCH, ROCKER, DPST, 20A	1	
..1	380-9006-001	FAN,WITH CONNECTOR,COUNTER ROTATING,12V DC,120 MM SQ X 76 MM	1	
....2	380-6307	FINGER GUARD,FAN,4.125 CENTERS	1	
....2	380-9006	FAN,COUNTER ROTATING,12V DC,120MM X 76MM	1	
....2	418-1105	CONN,PLUG,10-PIN,5X2,SAMTEC MINI-MATE	1	
....2	418-2024	PIN,FEMALE CRIMP,.100,20-24 AWG,GOLD,SAMTEC"	8	
..1	400-0014	GROMMET,3/8IDX5/8ODFOR7/16HOLE	1	
..1	400-0207	STRIP,QUIET SHIELD,.250x.375""	1.1	
..1	400-4200	GASKET, EXTRD EMI SHIELD SILCON,ALUM,SILVR	5.25	
..1	402-0000	TY-RAP	9	
..1	402-0001	TY-RAP,T+B TY24M,1-1/4 DIA	2	
..1	402-0833	CLAMP,CBL,1/4	2	
..1	411-7086	TERM BLK FEED-THRU 1-4MM GRAY	2	
..1	411-7866	TERM BLK,FEED-THRU,1-4MM GRN/YEL	1	
..1	420-0500	SCREW,10-32X.375,BR PH	2	
..1	420-3005	SCREW,5/16-18X1.000,S.S. BOLT	4	
..1	420-4124	SCREW,4-40X1.500,S.S. PH	4	
..1	420-6110	SCREW,6-32X.625,S.S. PH	4	
..1	420-8106	SCREW,8-32X.375,S.S. PHH	5	
..1	420-8121	SCREW,8-32X.375,BR PH	5	
..1	420-8706	SCREW,8-32X.375,BRASS THUMB	1	
..1	420-9720	RETAINER,NUT,OD:0.26,FITS SHAFT 5/32""	4	
..1	421-3003	5/16-18 S.S. HEX NUT	5	
..1	421-3802	NUT,JAM,5/16-18,BRASS"	5	
..1	421-6008	6-32 KEP NUT	2	
..1	421-8028	NUT,JAM,1/2-28 UNEF-2B	1	
..1	422-0110	SCREW,10-32 X 5/8,PPH,SEM,STEEL,ZINC PLATING"	4	
..1	422-6106	SCREW,SEMS 6-32 X 3/8 PAN PH. ST."	36	
..1	423-0007	#10 LOCK INT TOOTH	2	
..1	423-6002	#6 LOCK SPLIT	4	
..1	423-8002	#8 LOCK SPLIT	5	
..1	423-8006	#8 LOCK INT TOOTH	6	
..1	423-9002	WASH,INT TOOTH,1/2	1	
..1	426-3020	STUD,HIGH-STRENGTH,SST,5/16-18,1.25"LONG"	5	
..1	427-0009-300	CONNECTOR,MODIFIED,OUTPUT,STX 3/5 KW	1	
..1	427-0010	ASSY,ADAPTOR 1 5/8 FLANGED	1	
..1	441-4801	STOFF, 1/2 SNAP LOCK NYLON .062 PCB"	8	
..1	441-6108	STOFF,MF,#6 X .500L,BRASS (NOTE)	13	
..1	469-0021	FINGER STOCK,LAIRD 97-550,24 LONG"	3.333	
..1	469-0366	FINGER STOCK (NOTE!!!!!)	11	
..1	471-4222	FRONT PANEL, STX LP,5KW COMBINER	1	

©2013 Broadcast Electronics

BOM LEVEL	PART NO.	DESCRIPTION	QTY	REF. DES.
..1	471-4225	SAFETY SHIELD FOR ELECTRICAL SOURCE STX LP	1	
..1	471-4250-100	WELDMENT,CHASSIS,STX COMBINER	1	
..1	471-4253-100	ENCLOSURE,STX COMBINER	1	
..1	471-4256-200	COVER,INNER,NEW,STX COMBINER	1	
..1	471-4257-100	COVER,TOP,STX COMBINER	1	
..1	471-4261	STRAP,FAN,STX COMBINER	2	
..1	486-7150	HANDLE, 4 X 1.375", BRASS, CHROME PLATED, #10-32 THREADS"	2	
..1	510-273	Foam tape 1/2 thick X 3/4 wide X 17' LONG	0.083	
..1	540-1012-100	POWER SUPPLY, 12V 65W AC/DC CONVERTER 2X4" STX LP"	1	
..1	540-1012-501	POWER SUPPLY 12V 80/100W AC/DC 2X4IN	1	
..1	594-0073	LABEL,WARNING ROTATING FANS	1	
..1	594-0505	LABEL, WARNING-ONLY AUTHORIZED PERSONNEL	2	
..1	700-0130	LACQUER,INSP BLU F-1000 SENTRY	1	
..1	849-2010-100	CBL,ASSY,.050 DOUBLE ROW 10 PIN FEMALE IDC ASSEMBLY,28 INCH	1	
..1	849-2526	CBL,ASSY,.050 DOUBLE ROW 26 PIN FEMALE IDC ASSY,25.0 INCH	1	
..1	919-4075	ASSY, STX LP PA/COMBINER LED BOARD (SBCM)	1	
....2	007-1044	CAP,CER,0.1uF,50V,10%,SMD note	4	C2, C3, C6, C9
....2	007-3923	CAP,CER,390pF,100V,5%,SMD	2	C4, C8
....2	007-4702-500	CAP,CER,47pF,50V,2%,SMD	2	C5, C7
....2	070-1065	CAP,TANT,10UF,20V,10%,SMD	1	C1
....2	102-0000	RES,CHIP,0 OHM,0805,SMD	5	R21, R24, R25, R26, R27
....2	102-0100	RES,CHIP,10.0 OHMS,1/10W,1%,SMD	1	R22
....2	102-1001	RES,CHIP,1.00K OHMS,1/10W,1%,SMD	2	R18, R20
....2	102-1002	RES,CHIP,10.0K OHMS,1/10W,1%,SMD	2	R23, R30
....2	102-1003	RES,CHIP,100K OHMS,1/10W,1%,SMD	4	R6, R11, R13, R16
....2	102-1214	RES, CHIP, 1.21K OHM, 1/10W, 1%	1	R3
....2	102-2001	RES,CHIP,2.00K OHMS,1/10W,1%,SMD	1	R29
....2	102-2210	RES,CHIP,221 OHMS,1/10W,1%,SMD	1	R2
....2	102-4021	RES,CHIP,4.02K OHMS,1/10W,1%,SMD	1	R19
....2	102-7150	RES,CHIP,715 OHMS,1/10W,1%,SMD	9	R4, R7, R8, R9, R10, R12, R14, R15, R17
....2	216-7002	IC,MOSFET,2N7002LT1,SMD	5	Q1, Q2, Q3, Q4, Q5
....2	220-0035	IC,LM35DZ CELSIUS TEMP SENSOR	1	U3
....2	221-0358-001	DUAL OP AMP, SMD, SOIC8	1	U2
....2	231-3170	VR,LM317,SMD	1	U1
....2	325-0807	LED,DUAL,SUPER RED/GRN,SMD,0807 (note)	5	DS1, DS2, DS3, DS4, DS5
....2	340-0004	SW,JUMPER PROGRAMMABLE	1	P1
....2	417-0308	CONN,JACK,3-PIN,SMD	1	J2
....2	418-451	Diode, SMT, Zener, 5.1V Motorola BZX84C5V1LT1	1	D1
....2	418-5010	CONN, 10 PIN, MALE, SMT, 0.050, KEYED, WITH LATCHES"	1	J1
....2	519-4075	PCB, STX LP PA/COMBINER LED BOARD	1	

©2013 Broadcast Electronics

BOM LEVEL	PART NO.	DESCRIPTION	QTY	REF. DES.
..1	919-4085-100	PCB, ASSY, STX LP PA/COMBINER 5-WAY COMBINER	1	
....2	007-1012	CAP,CER,10pF,50V,2%,SMD	3	C7, C14, C21
....2	007-1201	CAP,CER,12PF,50V,2%,SMD	9	C2, C3, C5, C9, C10, C16, C17, C22, C24
....2	007-1512	CAP,CER,15pF,50V,2%,SMD	3	C6, C13, C20
....2	007-2200	CAP,CER,2.2pF,50V,.25pF,SMD	2	C12, C19
....2	007-2202-050	CAP,CER,22 PFD,5%,50V,1206,SMD	3	C4, C11, C18
....2	007-3300	CAP,CER,3.3PF,50V,.25pF,SMD	1	C23
....2	007-3312	CAP,CER,33pF,50V,2%,SMD	3	C1, C8, C15
....2	040-3312-005	CAP,MICA,RF,33PF,500V,5%,SMT	1	C25
....2	046-0047	CAP,PTFE,RF,4.7PF,1000V,+/-0.5PF,SMT	1	C26
....2	091-1511	CAP,TRIMMER,3-10 PF,NPO,25V,SMD	1	C27
....2	105-0018	RES,CHIP,18.2 OHM,1W,1%,2512,SMD	3	R2, R10, R18
....2	105-0075	Chip Res,75 ohm 1W 1% SMD 2512	3	R1, R9, R17
....2	105-0102	RES, CHIP, 1K OHM, 1W, 5%, 2512	7	R5, R6, R13, R14, R21, R22, R30
....2	105-0302	RES,CHIP,301 OHM,1W,1%,2512,SMD	15	R3, R4, R7, R8, R11, R12, R15, R16, R19, R20, R23, R24, R26, R28, R29
....2	178-5045	RES,TRMR,5K,20T,VERT	2	R25, R27
....2	360-4210	COIL,12 GA,9.45T,280nH	1	L15
.....3	640-1200	WIRE,12GA,MAGNET	0.026	
....2	366-0120-100	IND, 120NH, AIR, 5%, SMD, 1812	9	L1, L2, L3, L4, L5, L6, L7, L8, L9
....2	417-0265	CONN,BNC,JACK,THREADED,PC EDGE MOUNT,LOW PROFILE	1	J1
....2	417-1701	STRAIGHT JACK RECEPTACLE,SMB PCB MOUNT 50 OHM	2	J2, J3
....2	426-0000	PEM NUT,#10-32 KFS2-032	2	
....2	519-4085-100	PCB, FAB, 5-WAY COMBINER	1	
..1	919-4095-001	ASSY, STX LP COMBINER FILTER BOAR (SBCM)	1	
....2	007-0100-035	CAP, LYTIC, 100UF, 35V, 20%, LOW IMP, SMD	1	C6
....2	007-0102	CAP,CER,CHIP,1000pF,50V,5%,SMD	4	C11, C12, C17, C18
....2	007-1044	CAP,CER,0.1uF,50V,10%,SMD note	10	C1, C4, C7, C8, C10, C13, C14, C16, C19, C21
....2	007-1075-100	CAP, CER CHIP, 10 UF, 10V, 1206	2	C9, C15
....2	070-1065	CAP,TANT,10UF,20V,10%,SMD	3	C3, C5, C20
....2	102-0000	RES,CHIP,0 OHM,0805,SMD	2	R9, R25
....2	102-0152	RES,CHIP,1.5K OHM,0.1%,1/10W,0805,SMD	1	R20
....2	102-1000	RES,CHIP,100 OHMS,1/10W,1%,SMD	2	R12, R18
....2	102-1001	RES,CHIP,1.00K OHMS,1/10W,1%,SMD	4	R11, R13, R14, R19
....2	102-1002	RES,CHIP,10.0K OHMS,1/10W,1%,SMD	1	R3
....2	102-1200	RES,CHIP,121 OHMS,1/10W,1%,SMD (NOTE)	2	R2, R6
....2	102-2001	RES,CHIP,2.00K OHMS,1/10W,1%,SMD	2	R17, R23
....2	102-3012	RES,CHIP,30.1K,1/10W,1%,SMD	1	R1
....2	102-3570	RES,CHIP,357 OHMS,1/10W,1%,SMD	1	R10

©2013 Broadcast Electronics

BOM LEVEL	PART NO.	DESCRIPTION	QTY	REF. DES.
....2	102-6409	RES,CHIP,64.9 OHMS,1/10W,1%,SMD	2	R15, R21
....2	102-7521	RES,CHIP,75 OHMS,1/10W,1%,SMD	4	R4, R5, R7, R8
....2	178-5045	RES,TRMR,5K,20T,VERT	2	R16, R22
....2	216-0830	IC,OP AMP,OPA830,SOT23-5,R/R OUTPUT	2	U1, U3
....2	221-8361	IC, TRUE AVERAGE POWER DETECTOR	2	U2, U4
....2	320-0603	LED GREEN SMD	2	DS1, DS2
....2	350-197	INDUCTOR, SMT, POWER, 1uH	2	L1, L2
....2	417-0700	CONN,PCB MT,2PIN	1	J8
....2	417-0701	CONN,SMA FEMALE PC MOUNT	1	J3
....2	417-1102	CONN,HEADER,VERT,4-PIN,2X2,SAMTEC MINI-MATE	1	J6
....2	417-1105	CONN,HEADER,VERT,10-PIN,5X2,SAMTEC MINI-MATE	1	J4
....2	417-1701	STRAIGHT JACK RECEPTACLE,SMB PCB MOUNT 50 OHM	1	J5
....2	418-0255	CONN,MALE,4PIN	1	J2
....2	418-5010	CONN, 10 PIN, MALE, SMT, 0.050, KEYED, WITH LATCHES"	1	J7
....2	418-5026	CONN, 26 PIN, MALE, SMT, 0.050, KEYED, WITH LATCHES"	1	J1
....2	519-4095-001	PCB, STX LP COMBINER FILTER BOARD	1	PCB
..1	949-4101-100	CABLE,12GA BLUE,6 LG,STRIP-PUSH ON (SBCM)	1	
....2	410-0050	LUG,TERM,10-12GA,FEMSPADE	1	
....2	601-1202-006	WIRE,AWG 12,STRANDED,LIGHT BLUE	0.5	
....2	611-3750	TUB,HT SHK,3/8	0.104	
..1	949-4101-200	CABLE,12GA BROWN,6 LG,STRIP-PUSH ON (SBCM)	1	
....2	410-0050	LUG,TERM,10-12GA,FEMSPADE	1	
....2	601-1202-001	WIRE,AWG 12,STRANDED,BROWN	0.5	
....2	611-3750	TUB,HT SHK,3/8	0.104	
..1	949-4114-100	HARNESS,MAIN,STX COMBINER WITH -501 PS (SBCM)	1	
....2	410-0065	LUG,TERM #6 RING CRIMP #22 AWG	1	
....2	410-1421	LUG,QUICK DISCONNECT #18-22	2	
....2	410-2478	CRIMP TERMINAL,AMP 640707-1	10	
....2	417-0053	SKT,CONN 641294-1 AMP	6	
....2	417-0306	HSNG,3 POS,SL-156	2	
....2	417-0606	HSNG,6 POS,SL-156	1	
....2	417-2806	CONNECTOR, HOUSING, 4-PIN .001" 1.000 " "		
....2	417-2816	PIN, CRIMP .100,22-24 GA"	4	
....2	417-4025	HOUSING,4-PIN,AMP 640250-4	1	
....2	418-0240	PLUG,FEM,4PIN	1	
....2	418-0701	CONN,HOUSING,2 PIN	1	
....2	418-1102	CONN,PLUG,4-PIN,2X2,SAMTEC MINI-MATE	1	
....2	418-2024	PIN,FEMALE CRIMP,.100,20-24 AWG,GOLD,SAMTEC"	4	
....2	601-1800-054	WIRE,AWG 18,STRANDED,GREEN/YELLOW	1.917	
....2	601-2209	WIRE,AWG22,7/30 WHT	18.167	
....2	611-2500	TUB,HT SHK,1/4	0.167	
....2	611-3750	TUB,HT SHK,3/8	0.208	

©2013 Broadcast Electronics

BOM LEVEL	PART NO.	DESCRIPTION	QTY	REF. DES.
..1	949-4115	CABLE,RFL PWR,STX COMBINER,3KW/5KW	1	
....2	410-0065	LUG,TERM #6 RING CRIMP #22 AWG	1	
....2	417-1702	RIGHT ANGLE CRIMP TYPE PLUG,SMB,50 OHM	1	
....2	417-1703	Straight Crimp Type Plug,SMB,50 ohm	1	
....2	601-0022	WIRE,AWG22,BUSS	0.229	
....2	621-1359	CBL,COAX,RG316/U,50 OHM	3	
..1	949-4116	CABLE,FWD PWR,STX COMBINER,3KW/5KW	1	
....2	410-0065	LUG,TERM #6 RING CRIMP #22 AWG	1	
....2	417-1703	Straight Crimp Type Plug,SMB,50 ohm	1	
....2	417-8030	CONN,PLUG,RT ANG,SMA,HEX CRIMP	1	
....2	601-0022	WIRE,AWG22,BUSS	0.229	
....2	621-1359	CBL,COAX,RG316/U,50 OHM	2.5	
..1	959-4005-105	ASSY, STX SPLITTER 5	1	
....2	469-0021	FINGER STOCK,LAIRD 97-550,24 LONG"	0.145	
....2	469-5500	FINGER STOCK,TECH-ETCH 250P37-16-02	0.5	
....2	471-4255-100	COVER,SPLITTER,STX COMBINER	1	
....2	919-4005-105	ASSY,5-WAY,STX LP PA/COMBINER SPLITTER BOARD	1	
.....3	105-0051	RES, CHIP, 51 OHM, 1W, 5%, 2512	-2	REMOVE R65 & R66 (SCRAP AGAINST 40500)
.....3	417-3120	CONN, BNC RIGHT ANGLE DUAL PORT PCB MOUNT/SHIELDED	1	J3
.....3	919-4005-103	ASSY,3-WAY,STX LP PA/COMBINER SPLITTER BOARD(SBCM)	1	
.....4	003-0105	CAP, CER, 1UF, 100V, 1812, 20%, SMD	4	C27, C28, C30, C33
.....4	007-1024	CAP,CER,.001uF,50V,10%,SMD	7	C36, C48, C55, C60, C64, C74, C81
.....4	007-1034	CAP,CER,0.01uF,50V,10%,SMD	4	C50, C68, C70, C75
.....4	007-1034-001	CAP,CER,.01UF,10%,50V,0603,SMD	16	C6, C7, C8, C9, C11, C12, C13, C14, C15, C16, C17, C18, C19, C20, C21, C22
.....4	007-1040-025	CAP,CER,.1UF,+80,-20%,25V,0603,SMD	14	C1, C2, C3, C4, C5, C10, C23, C24, C25, C26, C29, C34, C84, C85
.....4	007-1044	CAP,CER,0.1uF,50V,10%,SMD note	12	C35, C39, C40, C44, C51, C61, C65, C67, C69, C78, C79, C82
.....4	007-1054-001	CAP,CER,1UF,10%,10V,X7R,0805,SMD	1	C47
.....4	007-1075-100	CAP, CER CHIP, 10 UF, 10V, 1206	2	C32, C80
.....4	007-2202-050	CAP,CER,22 PFD,5%,50V,1206,SMD	1	C77
.....4	007-2202-500	CAP,CER,22pF,50V,2%,SMD	1	C56
.....4	007-2702-500	CAP,CER,27pF,50V,2%,SMD	1	C58
.....4	007-3912	CAP,CER,39pF,50V,5%,SMD	1	C62
.....4	007-6800-500	CAP,CER,6.8pF,50V,.25pF,SMD	10	C37, C38, C41, C42, C45, C46, C49, C52, C53, C54
.....4	007-6812	CAP,CER,68pF,50V,2%,SMD	1	C43

©2013 Broadcast Electronics

BOM LEVEL	PART NO.	DESCRIPTION	QTY	REF. DES.
.....4	009-1032-050	CAP,CER CHIP,1000PF,50V,5%	1	C63
.....4	070-1065	CAP,TANT,10UF,20V,10%,SMD	4	C31, C59, C66, C73
.....4	102-0000	RES,CHIP,0 OHM,0805,SMD	12	R43, R46, R47, R49, R50, R130, R131, R132, R134, R136, R137, R143
.....4	102-0100	RES,CHIP,10.0 OHMS,1/10W,1%,SMD	2	R94, R95
.....4	102-1000	RES,CHIP,100 OHMS,1/10W,1%,SMD	6	R1, R2, R34, R38, R111, R146
.....4	102-1001	RES,CHIP,1.00K OHMS,1/10W,1%,SMD	9	R5, R19, R24, R53, R70, R92, R112, R114, R138
.....4	102-1002	RES,CHIP,10.0K OHMS,1/10W,1%,SMD	26	R16, R52, R74, R75, R77, R78, R79, R80, R81, R85, R87, R89, R90, R98, R100, R102, R104, R106, R119, R122, R123, R124, R125, R126, R147, R151
.....4	102-1003	RES,CHIP,100K OHMS,1/10W,1%,SMD	12	R54, R82, R84, R88, R93, R97, R99, R139, R141, R142, R149, R150
.....4	102-1004	RES,CHIP,1.00M OHMS,1/10W,1%,SMD	4	R56, R73, R127, R140
.....4	102-1500	RES,CHIP,150 OHMS,1/10W,1%,SMD	1	R68
.....4	102-1503	RES,CHIP,150K OHMS,1/10W,1%,SMD	2	R83, R144
.....4	102-2000	RES,CHIP,200 OHM,1/10 W,1% SMD	3	R7, R13, R55
.....4	102-2001	RES,CHIP,2.00K OHMS,1/10W,1%,SMD	16	R3, R4, R8, R9, R11, R12, R15, R21, R23, R26, R28, R30, R32, R35, R37, R40
.....4	102-2212	RES,CHIP,22.1K OHMS,1/10W,1%,SMD	1	R121
.....4	102-2214	RES,CHIP,2.21K OHM,1/10W,1%	1	R76
.....4	102-2273	RES,CHIP,2.2M OHM,1/10 W,5%	1	R148
.....4	102-2410	RES,CHIP,243 OHMS,1/10W,1%,0805,SMD	1	R96
.....4	102-2431	RES,CHIP,2.43K OHMS,1/10W,1%,SMD	6	R42, R44, R45, R71, R107, R108
.....4	102-2491	RES,CHIP,2.49K,1/10W,1%,SMD	1	R101
.....4	102-3012	RES,CHIP,30.1K,1/10W,1%,SMD	1	R105
.....4	102-3160	RES,CHIP,3.16K OHMS,1/10W,1%,SMD	1	R59
.....4	102-3323	RES,CHIP,332K OHMS,1/10W,1%,SMD	1	R120
.....4	102-3570	RES,CHIP,357 OHMS,1/10W,1%,SMD	1	R117
.....4	102-4223	RES,CHIP,422k OHM,1%,1/10W,0805,SMD	1	R86
.....4	102-4320	RES,CHIP,432 OHMS,1/10W,1%,SMD	1	R91
.....4	102-5491	RES,CHIP,5.49K,1/10W,1%,SMD	1	R57
.....4	102-6409	RES,CHIP,64.9 OHMS,1/10W,1%,SMD	1	R110
.....4	104-1001	RES,CHIP,1.0 K OHM,1%,1/16W,0603,SMD	3	R58, R116, R118
.....4	105-0018	RES,CHIP,18.2 OHM,1W,1%,2512,SMD	1	R103
.....4	105-0051	RES, CHIP, 51 OHM, 1W, 5%, 2512	7	R60, R61, R62, R63, R64, R65, R66

©2013 Broadcast Electronics

BOM LEVEL	PART NO.	DESCRIPTION	QTY	REF. DES.
.....4	105-0294	RES,CHIP,294 OHM,1W,1%,2512,SMD	3	R109, R128, R129
.....4	198-1054	TRMR,10K OHMS,TOP ADJ,SMD (N)	1	R69
.....4	198-2024	TRMR,2K OHMS,TOP ADJUST,10 TURN,SMD	1	R115
.....4	204-0914	DIODE,SWITCHING,MMBD914LT1,SMD	5	D2, D3, D4, D5, D6
.....4	210-4031	TSTR, BIPOLAR POWER, NPN, NJT4031N, SMD	1	Q14
.....4	210-7805	REG, 5V, 1A, 3 TERMINAL, POSITIVE VOLTAGE, SMD, D-PAK	1	U14
.....4	210-8504	RF POWER TRANSISTOR, PD85004, SMD, SOD-89	1	U11
.....4	216-0339	IC,LM339AM,VOLTAGE COMPARATOR,SMD	1	U12
.....4	216-0830	IC,OP AMP,OPA830,SOT23-5,R/R OUTPUT	1	U16
.....4	216-1963	LINEAR TECH LT1963 1.5 AMP LDO ADJUSTABLE REGULATOR	1	U10
.....4	216-2343	MOSFET,P CHAN,2A,30V,.08 OHM,SOT-23	1	Q6
.....4	216-4013	IC,MC14013BD DUAL D FLIP FLOP,SMD	1	U20
.....4	216-5235	ANALOG DEVICES AD5235 DIGITAL POTS	2	U3, U19
.....4	216-6549	IC, DUAL LVDS DIFFERENTIAL DRIVERS AND RECEIVERS, TSSOP16	1	U1
.....4	216-7002	IC,MOSFET,2N7002LT1,SMD	19	Q1, Q2, Q3, Q4, Q5, Q7, Q8, Q9, Q10, Q11, Q12, Q13, Q15, Q16, Q17, Q18, Q19, Q20, Q21
.....4	216-7400	IC,SN74AHCT1G00DBV,2-INPUT POS NAND,DBV,SMD	1	U7
.....4	216-7414-001	IC, SCHMITT TRIGGERED SINGLE GATE INVERTER,SC-70	5	U4, U6, U9, U17, U18
.....4	216-7490	ANALOG DEVICES AD7490 16 CHAN A/D	1	U2
.....4	216-8574	IC, ADI AD8574 4CHANNEL R/R OP AMP	1	U8
.....4	220-7425	IC, COMPARATOR, LMV7219, 7NS, 2.5-5V, R-R	1	U21
.....4	221-8361	IC, TRUE AVERAGE POWER DETECTOR	1	U15
.....4	224-0324	IC,LM324,QUAD OP-AMP,SMD	1	U13
.....4	224-4000	GATE, SINGLE, XOR, 2 INPUT, 8NS TPD	1	U5
.....4	231-0136	IC,VOLT REF,2.5V,8-PIN SOIC	1	D1
.....4	320-0603	LED GREEN SMD	4	DS1, DS2, DS3, DS4
.....4	340-0004	SW,JUMPER PROGRAMMABLE	2	P4, P5
.....4	350-188	INDUCTOR, 1210 1uH CHIP	2	L6, L7
.....4	366-0010-010	INDUCTOR,10 NH,5%,0805CS-100XJB,0805,SMD	1	L8
.....4	366-0068-200	IND,68NH,CER WW,0805,5%,SMD	1	L9
.....4	366-0100	IND,100NH LAMINATED CER,0805,SMD	1	L10
.....4	366-0180-001	INDUCTOR, 180nH, 10%, SMD, 1008	5	L1, L2, L3, L4, L5
.....4	413-0603	Chip,Test Point 0603 SMD	3	TP1, TP2, TP3
.....4	413-1206	CHIP,TEST POINT,1206,SMD	1	TP6
.....4	413-1520	TERM,TURRET SINGLE, .109 L, .078" BASE"	1	TP5
.....4	417-0037-001	BNC,R ANGLE PC MTG,SHIELDED	2	J6, J7
.....4	417-0200	CONN,HEADER 20 PIN	0.2	J5, J8
.....4	417-1050	.100,10 pin double row terminal strip"	1	J4

©2013 Broadcast Electronics

BOM LEVEL	PART NO.	DESCRIPTION	QTY	REF. DES.
.....4	417-3120	CONN, BNC RIGHT ANGLE DUAL PORT PCB MOUNT/SHIELDED	1	J2
.....4	417-4604	CONN, PCB MOUNTED RJ45 RIGHT ANGLE WITH LEDS	1	J1
.....4	418-5026	CONN, 26 PIN, MALE, SMT, 0.050, KEYED, WITH LATCHES"	1	J11
.....4	519-4005-103	PCB, STX LP COMBINER SPLITTER BOARD	1	
..1	959-4015-105	ASSY, STX RF INPUT 5,BOURNS RES	1	
....2	131-5080-001	RES,50 OHM,800W, BOURNS,5%,FLANGED	5	
....2	360-4211	COIL,14 GA,7.65T, 130nH	1	
.....3	410-1552	LUG,TERM #8 RING CRIMP 16-22	1	
.....3	611-5000	TUB,HT SHK 1/2	1.25	
.....3	640-1400	WIRE,14GA,MAGNET	0.012	
....2	360-4211-300	COIL, 14GA, 6.5T	2	
.....3	410-1552	LUG,TERM #8 RING CRIMP 16-22	1	
.....3	611-5000	TUB,HT SHK 1/2	1.25	
.....3	640-1400	WIRE,14GA,MAGNET	0.011	
....2	420-6108	SCREW,6-32X.500,S.S. PH	20	
....2	420-6506	SCREW,6-32X.375,S.S. PH FH	6	
....2	422-6107	SCREW,SEMS 6-32 X 7/16 PAN PH.ST."	5	
....2	423-6002	#6 LOCK SPLIT	20	
....2	423-6011	#6 FLAT .310 X .160 X .030	20	
....2	427-0067	CONNECTOR, N, THK PCB, STRAIGHT, PNL MTG	5	J1, J2, J3, J4, J5
....2	440-0501	STANDOFF, 5/16 .060 SPACER"	1	
....2	441-4202	STOFF, COPPER, .375D x 1.000" 5.000 " "		
....2	441-5504	STOFF,SS 1/4 HEX X 7/16" LONG,MALE-FEMALE 8-32"	5	
....2	455-4000-100	HEATSINK,COMBINER,STX	1	
....2	455-4001-100	PLATE,ALUMINUM,STX 3/5 KW	1	
....2	463-4501	CONNECTOR, .060 COPPER STAR	1	
....2	519-4015	PCB, STX LP PA/COMBINER RF INPUT BOARD	1	
....2	919-4025	ASSY, STX LP PA/COMBINER BACKER BOARD(SBCM)	1	
.....3	007-0020-006	CAP,20pF,5%,50v,SMD,0603	1	C7
.....3	007-1024	CAP,CER,.001uF,50V,10%,SMD	6	C4, C6, C10, C12, C16, C18
.....3	007-1044	CAP,CER,0.1uF,50V,10%,SMD note	8	C1, C2, C3, C8, C9, C13, C14, C15
.....3	102-0000	RES,CHIP,0 OHM,0805,SMD	1	R6
.....3	102-1000	RES,CHIP,100 OHMS,1/10W,1%,SMD	6	R2, R3, R8, R9, R14, R15
.....3	102-1002	RES,CHIP,10.0K OHMS,1/10W,1%,SMD	4	R17, R20, R21, R22
.....3	102-1214	RES, CHIP, 1.21K OHM, 1/10W, 1%	3	R5, R12, R18
.....3	102-2214	RES,CHIP,2.21K OHM,1/10W,1%	3	R1, R7, R13
.....3	102-4321	RES,CHIP,4.32K OHMS,1/10W,1%,SMD	4	R4, R10, R16, R19
.....3	204-0914	DIODE,SWITCHING,MMBD914LT1,SMD	3	D1, D2, D3
.....3	216-0830	IC,OP AMP,OPA830,SOT23-5,R/R OUTPUT	3	U2, U5, U7
.....3	216-1490	IC,OP AMP,LT1490,DUAL,R/R I/O,SMT	2	U3, U8
.....3	220-0035	IC,LM35DZ CELSIUS TEMP SENSOR	3	U1, U4, U6
.....3	413-1206	CHIP,TEST POINT,1206,SMD	3	TP1, TP2, TP3

©2013 Broadcast Electronics

BOM LEVEL	PART NO.	DESCRIPTION	QTY	REF. DES.
.....3	417-2838	HEADER 4-PIN .100 R.ANGLE LOCKING"	1	J1
.....3	519-4025	PCB, STX LP PA/COMBINER BACKER BOARD	1	

©2013 Broadcast Electronics

BOM LEVEL	PART NO.	DESCRIPTION	QTY	REF. DES.
0	909-4201-100	STX 2KW AC DIST,180-260VAC,1PH,OPTIONAL		
..1	341-0078	CKT. BRKR,20A,2 POLE,250VAC	2	
..1	402-0000	TY-RAP	4	
..1	410-0030	LUG,1/4-MTG,1/0-6,SOLDERLESS	1	
..1	412-0050	TERM BLOCK,GOULD 63133	1	
..1	421-0102	10-32 KEP NUT	9	
..1	421-1110	RIV,1/8X.44L .188-.250GR CLOSE	1	
..1	471-5496	FILLER PLATE,POWER DISTRIBUTION,STX	3	
..1	471-5497	GUARD,AC INPUT,STX	1	
..1	471-5498	GUARD,BREAKER,STX	1	
..1	471-5499-002	PANEL,POWER DISTRIBUTION,STX 2KW	1	
....2	471-5499-009	PANEL,POWER DISTRIBUTION,STX,UNSCREENED	1	
..1	500-183	Screw, 6-32 x 1/4 phillips pan head Black Zinc"	20	
..1	949-4109	HARNESS,MAIN,STX POWER DISTRIBUTION (SBCM)	1	
....2	410-0060	LUG,TERM,#10 RING CRIMP 10-12G	8	
....2	601-1200	WIRE,AWG12 19/25 BLK	2.125	
....2	601-1202	WIRE,AWG12 19/25 RED	2.125	
....2	601-1202-054	WIRE,AWG 12,STRANDED, GREEN/YELLOW	0.833	
..1	949-4111	CABLE,AC INPUT,STX 1KW (SBCM)	3	
....2	410-0060	LUG,TERM,#10 RING CRIMP 10-12G	3	
....2	603-0012	WIRE, CAROL, 12AWG, 3C, SJ00W, AC CABLE	7	
....2	611-5000	TUB,HT SHK 1/2	0.125	

©2013 Broadcast Electronics

BOM LEVEL	PART NO.	DESCRIPTION	QTY	REF. DES.
0	909-4301-100	STX 3KW AC DIST,180-260VAC,1PH,OPTIONAL		
..1	341-0078	CKT. BRKR,20A,2 POLE,250VAC	3	
..1	402-0000	TY-RAP	5	
..1	410-0030	LUG,1/4-MTG,1/0-6,SOLDERLESS	1	
..1	412-0050	TERM BLOCK,GOULD 63133	1	
..1	421-0102	10-32 KEP NUT	10	
..1	421-1110	RIV,1/8X.44L .188-.250GR CLOSE	1	
..1	471-5496	FILLER PLATE,POWER DISTRIBUTION,STX	2	
..1	471-5497	GUARD,AC INPUT,STX	1	
..1	471-5498	GUARD,BREAKER,STX	1	
..1	471-5499	PANEL,POWER DISTRIBUTION,STX 3KW	1	
....2	471-5499-009	PANEL,POWER DISTRIBUTION,STX,UNSCREENED	1	
..1	500-183	Screw, 6-32 x 1/4 phillips pan head Black Zinc"	20	
..1	949-4109	HARNESS,MAIN,STX POWER DISTRIBUTION (SBCM)	1	
....2	410-0060	LUG,TERM,#10 RING CRIMP 10-12G	8	
....2	601-1200	WIRE,AWG12 19/25 BLK	2.125	
....2	601-1202	WIRE,AWG12 19/25 RED	2.125	
....2	601-1202-054	WIRE,AWG 12,STRANDED, GREEN/YELLOW	0.833	
..1	949-4111	CABLE,AC INPUT,STX 1KW (SBCM)	4	
....2	410-0060	LUG,TERM,#10 RING CRIMP 10-12G	3	
....2	603-0012	WIRE, CAROL, 12AWG, 3C, SJ00W, AC CABLE	7	
....2	611-5000	TUB,HT SHK 1/2	0.125	

©2013 Broadcast Electronics

BOM LEVEL	PART NO.	DESCRIPTION	QTY	REF. DES.
0	909-4301-200	STX 3KW AC DIST,180-260VAC,3PH DELTA,OPTIONAL		
..1	341-0078	CKT. BRKR,20A,2 POLE,250VAC	3	
..1	402-0000	TY-RAP	5	
..1	410-0030	LUG,1/4-MTG,1/0-6,SOLDERLESS	1	
..1	412-0050	TERM BLOCK,GOULD 63133	1	
..1	421-0102	10-32 KEP NUT	10	
..1	421-1110	RIV,1/8X.44L .188-.250GR CLOSE	1	
..1	471-5496	FILLER PLATE,POWER DISTRIBUTION,STX	2	
..1	471-5497	GUARD,AC INPUT,STX	1	
..1	471-5498	GUARD,BREAKER,STX	1	
..1	471-5499	PANEL,POWER DISTRIBUTION,STX 3KW	1	
....2	471-5499-009	PANEL,POWER DISTRIBUTION,STX,UNSCREENED	1	
..1	500-183	Screw, 6-32 x 1/4 phillips pan head Black Zinc"	20	
..1	949-4109	HARNESS,MAIN,STX POWER DISTRIBUTION (SBCM)	1	
....2	410-0060	LUG,TERM,#10 RING CRIMP 10-12G	8	
....2	601-1200	WIRE,AWG12 19/25 BLK	2.125	
....2	601-1202	WIRE,AWG12 19/25 RED	2.125	
....2	601-1202-054	WIRE,AWG 12,STRANDED, GREEN/YELLOW	0.833	
..1	949-4111	CABLE,AC INPUT,STX 1KW (SBCM)	4	
....2	410-0060	LUG,TERM,#10 RING CRIMP 10-12G	3	
....2	603-0012	WIRE, CAROL, 12AWG, 3C, SJ00W, AC CABLE	7	
....2	611-5000	TUB,HT SHK 1/2	0.125	

©2013 Broadcast Electronics

BOM LEVEL	PART NO.	DESCRIPTION	QTY	REF. DES.
0	909-4501-100	STX 5KW AC DIST,180-260VAC,1PH,OPTIONAL		
..1	341-0078	CKT. BRKR,20A,2 POLE,250VAC	5	
..1	402-0000	TY-RAP	7	
..1	410-0030	LUG,1/4-MTG,1/0-6,SOLDERLESS	1	
..1	412-0050	TERM BLOCK,GOULD 63133	1	
..1	421-0102	10-32 KEP NUT	12	
..1	421-1110	RIV,1/8X.44L .188-.250GR CLOSE	1	
..1	471-5497	GUARD,AC INPUT,STX	1	
..1	471-5498	GUARD,BREAKER,STX	1	
..1	471-5499-001	PANEL,POWER DISTRIBUTION,STX 5KW	1	
....2	471-5499-009	PANEL,POWER DISTRIBUTION,STX,UNSCREENED	1	
..1	500-183	Screw, 6-32 x 1/4 phillips pan head Black Zinc"	20	
..1	949-4109	HARNESS,MAIN,STX POWER DISTRIBUTION (SBCM)	1	
....2	410-0060	LUG,TERM,#10 RING CRIMP 10-12G	8	
....2	601-1200	WIRE,AWG12 19/25 BLK	2.125	
....2	601-1202	WIRE,AWG12 19/25 RED	2.125	
....2	601-1202-054	WIRE,AWG 12,STRANDED, GREEN/YELLOW	0.833	
..1	949-4111	CABLE,AC INPUT,STX 1KW (SBCM)	6	
....2	410-0060	LUG,TERM,#10 RING CRIMP 10-12G	3	
....2	603-0012	WIRE, CAROL, 12AWG, 3C, SJ00W, AC CABLE	7	
....2	611-5000	TUB,HT SHK 1/2	0.125	
..1	949-4117	HARNESS,ADD ON FOR 5KW STX POWER DISTRIBUTION	1	
....2	410-0060	LUG,TERM,#10 RING CRIMP 10-12G	4	
....2	601-1200	WIRE,AWG12 19/25 BLK	1.417	
....2	601-1202	WIRE,AWG12 19/25 RED	1.417	

©2013 Broadcast Electronics

BOM LEVEL	PART NO.	DESCRIPTION	QTY	REF. DES.
0	909-4501-200	STX 5KW AC DIST,180-260VAC,3PH DELTA,OPTIONAL		
..1	341-0078	CKT. BRKR,20A,2 POLE,250VAC	5	
..1	402-0000	TY-RAP	7	
..1	410-0030	LUG,1/4-MTG,1/0-6,SOLDERLESS	1	
..1	412-0050	TERM BLOCK,GOULD 63133	1	
..1	421-0102	10-32 KEP NUT	12	
..1	421-1110	RIV,1/8X.44L .188-.250GR CLOSE	1	
..1	471-5497	GUARD,AC INPUT,STX	1	
..1	471-5498	GUARD,BREAKER,STX	1	
..1	471-5499-001	PANEL,POWER DISTRIBUTION,STX 5KW	1	
....2	471-5499-009	PANEL,POWER DISTRIBUTION,STX,UNSCREENED	1	
..1	500-183	Screw, 6-32 x 1/4 phillips pan head Black Zinc"	20	
..1	949-4109	HARNESS,MAIN,STX POWER DISTRIBUTION (SBCM)	1	
....2	410-0060	LUG,TERM,#10 RING CRIMP 10-12G	8	
....2	601-1200	WIRE,AWG12 19/25 BLK	2.125	
....2	601-1202	WIRE,AWG12 19/25 RED	2.125	
....2	601-1202-054	WIRE,AWG 12,STRANDED, GREEN/YELLOW	0.833	
..1	949-4111	CABLE,AC INPUT,STX 1KW (SBCM)	6	
....2	410-0060	LUG,TERM,#10 RING CRIMP 10-12G	3	
....2	603-0012	WIRE, CAROL, 12AWG, 3C, SJ00W, AC CABLE	7	
....2	611-5000	TUB,HT SHK 1/2	0.125	
..1	949-4117	HARNESS,ADD ON FOR 5KW STX POWER DISTRIBUTION	1	
....2	410-0060	LUG,TERM,#10 RING CRIMP 10-12G	4	
....2	601-1200	WIRE,AWG12 19/25 BLK	1.417	
....2	601-1202	WIRE,AWG12 19/25 RED	1.417	

©2013 Broadcast Electronics

BOM LEVEL	PART NO.	DESCRIPTION	QTY	REF. DES.
0	909-4501-300	STX 5KW AC DIST,311-449VAC, 3PH WYE, OPTIONAL		
..1	341-0078	CKT. BRKR,20A,2 POLE,250VAC	5	
..1	402-0000	TY-RAP	7	
..1	410-0030	LUG,1/4-MTG,1/0-6,SOLDERLESS	1	
..1	412-0050	TERM BLOCK,GOULD 63133	1.333	
..1	421-0102	10-32 KEP NUT	12	
..1	421-1110	RIV,1/8X.44L .188-.250GR CLOSE	1	
..1	471-5497	GUARD,AC INPUT,STX	1	
..1	471-5498	GUARD,BREAKER,STX	1	
..1	471-5499-001	PANEL,POWER DISTRIBUTION,STX 5KW	1	
....2	471-5499-009	PANEL,POWER DISTRIBUTION,STX,UNSCREENED	1	
..1	500-183	Screw, 6-32 x 1/4 phillips pan head Black Zinc"	20	
..1	949-4109	HARNESS,MAIN,STX POWER DISTRIBUTION (SBCM)	1	
....2	410-0060	LUG,TERM,#10 RING CRIMP 10-12G	8	
....2	601-1200	WIRE,AWG12 19/25 BLK	2.125	
....2	601-1202	WIRE,AWG12 19/25 RED	2.125	
....2	601-1202-054	WIRE,AWG 12,STRANDED, GREEN/YELLOW	0.833	
..1	949-4111	CABLE,AC INPUT,STX 1KW (SBCM)	6	
....2	410-0060	LUG,TERM,#10 RING CRIMP 10-12G	3	
....2	603-0012	WIRE, CAROL, 12AWG, 3C, SJ00W, AC CABLE	7	
....2	611-5000	TUB,HT SHK 1/2	0.125	
..1	949-4117	HARNESS,ADD ON FOR 5KW STX POWER DISTRIBUTION	1	
....2	410-0060	LUG,TERM,#10 RING CRIMP 10-12G	4	
....2	601-1200	WIRE,AWG12 19/25 BLK	1.417	
....2	601-1202	WIRE,AWG12 19/25 RED	1.417	

©2013 Broadcast Electronics

BOM LEVEL	PART NO.	DESCRIPTION	QTY	REF. DES.
0	909-4020	STEREO GENERATOR OPTION, STX LP		
..1	597-4104	STX STEREO GENERATOR INSTALLATION APPLICATION GUIDE	1	
..1	919-4020	ASSY, PCB, STEREO GENERATOR, STX LP (SBCM)	1	
....2	007-1022	CAP,CER,100pF,50V,2%,SMD	8	C8, C9, C13, C18, C22, C34, C37, C62
....2	007-1040-025	CAP,CER,.1UF,+80,-20%,25V,0603,SMD	31	C5, C10, C14, C15, C19, C20, C23, C24, C25, C26, C28, C30, C31, C33, C36, C38, C39, C40, C42, C44, C46, C47, C49, C50, C51, C53, C54, C57, C59, C63, C64
....2	007-1054-100	CAP , CER, CHIP, 1uF, 16V, 10%, X7R, SMD 0603	2	C1, C3
....2	007-3923	CAP,CER,390pF,100V,5%,SMD	2	C2, C4
....2	009-0204	CAP,TANTALUM CHIP,47UF,POLAR,10%,6V,SMD	1	C11
....2	070-1065	CAP,TANT,10UF,20V,10%,SMD	17	C6, C12, C17, C21, C27, C29, C32, C35, C41, C43, C45, C48, C52, C55, C56, C58, C61
....2	102-0000	RES,CHIP,0 OHM,0805,SMD	5	R19, R25, R27, R35, R61
....2	102-1001	RES,CHIP,1.00K OHMS,1/10W,1%,SMD	6	R1, R3, R17, R18, R55, R65
....2	102-1002	RES,CHIP,10.0K OHMS,1/10W,1%,SMD	20	R12, R20, R29, R30, R33, R34, R40, R41, R42, R43, R44, R45, R48, R49, R50, R58, R59, R60, R62, R63
....2	102-1133	RES,CHIP,110 OHMS,1/10W,1%,SMD	2	R32, R36
....2	102-1214	RES, CHIP, 1.21K OHM, 1/10W, 1%	4	R6, R9, R13, R22
....2	102-1432	RES, CHIP, 14.3K, 1/10W, 1%, SMD	2	R15, R66
....2	102-2000	RES,CHIP,200 OHM,1/10 W,1% SMD	4	R2, R31, R52, R64
....2	102-2743	RES,CHIP,274 OHM,1/10W,1%,SMD	1	R53
....2	102-3012	RES,CHIP,30.1K,1/10W,1%,SMD	2	R16, R67
....2	102-6193	RES,CHIP,619 OHM,1/10W,1%	1	R51
....2	102-8250	RES,CHIP,825 OHMS,1/10W,1%,SMD	8	R7, R8, R10, R11, R14, R21, R23, R24
....2	104-2000	RESISTOR,2Kohm,1/16W,1%,SMD,0603	2	R4, R5
....2	204-0914	DIODE,SWITCHING,MMBD914LT1,SMD	4	D1, D2, D3, D4
....2	216-1796	IC, STEREO DAC 24BIT 200KSPS PCM1796	1	U6
....2	216-1803	IC,SINGLE ENDED,ANALOG-INPUT 24-BIT,96-KHZ STEREO A/D CONVT	1	U5
....2	216-3904	TSTR,MMBT3904LT1,NPN,SMD	2	Q1, Q2
....2	216-4382	IC,TWO CHANNEL, ASYNC SAMPLE RATE CONVERTER W/DIG REC AND TX	2	U3, U8
....2	216-8676	IC, AD8676ARMZ, DUAL, R-R OP AMP, SMD	3	U1, U2, U7

©2013 Broadcast Electronics

....2	216-9301	IC,ULTRALOW-NOISE, HIGH PSRR, FAST LDO LINEAR VOLTAGE REG	2	U4, U9
....2	320-0603	LED GREEN SMD	7	DS1, DS2, DS3, DS4, DS5, DS6, DS15
....2	367-1128	XFMR, 5MHz-120MHz SMD	1	T1
....2	391-1689	OSC 3.3V PROG CMOS TRI ST 25PPM, 16.896 MHZ	1	Y1
....2	413-0603	Chip,Test Point 0603 SMD	6	TP2, TP3, TP9, TP10, TP11, TP12
....2	417-2205	CONN, HEADER, 2X20 RIGHT ANGLE THRU HOLE, .050 PITCH TFML	1	J1
....2	519-4020	PCB, STEREO GEN OPTION, STX LP	1	

BOM LEVEL	PART NO.	DESCRIPTION	QTY	REF. DES.
0	979-4100	KIT, OPTION, STX AIR FILTER		
..1	407-0178	FILTER, AIR, STX	1	
..1	471-4263	WELDMENT,AIR FILTER COVER	1	

©2013 Broadcast Electronics

12 RF Technical Services Contact Information

RF Technical Services -

Telephone: **(217) 224-9617**
E-Mail: **rfservice@bdcast.com**
Fax: **(217) 224-6528**
web**:** **www.bdcast.com**

13 Drawings

The following pages present the STXLP drawings.

©2013 Broadcast Electronics

REVISIONS					
REV	DATE	DESCRIPTION	DFTSMN	ENGR	ECN
A	6-23-09	RELEASE TO PRODUCTION	JTB	DWK	----

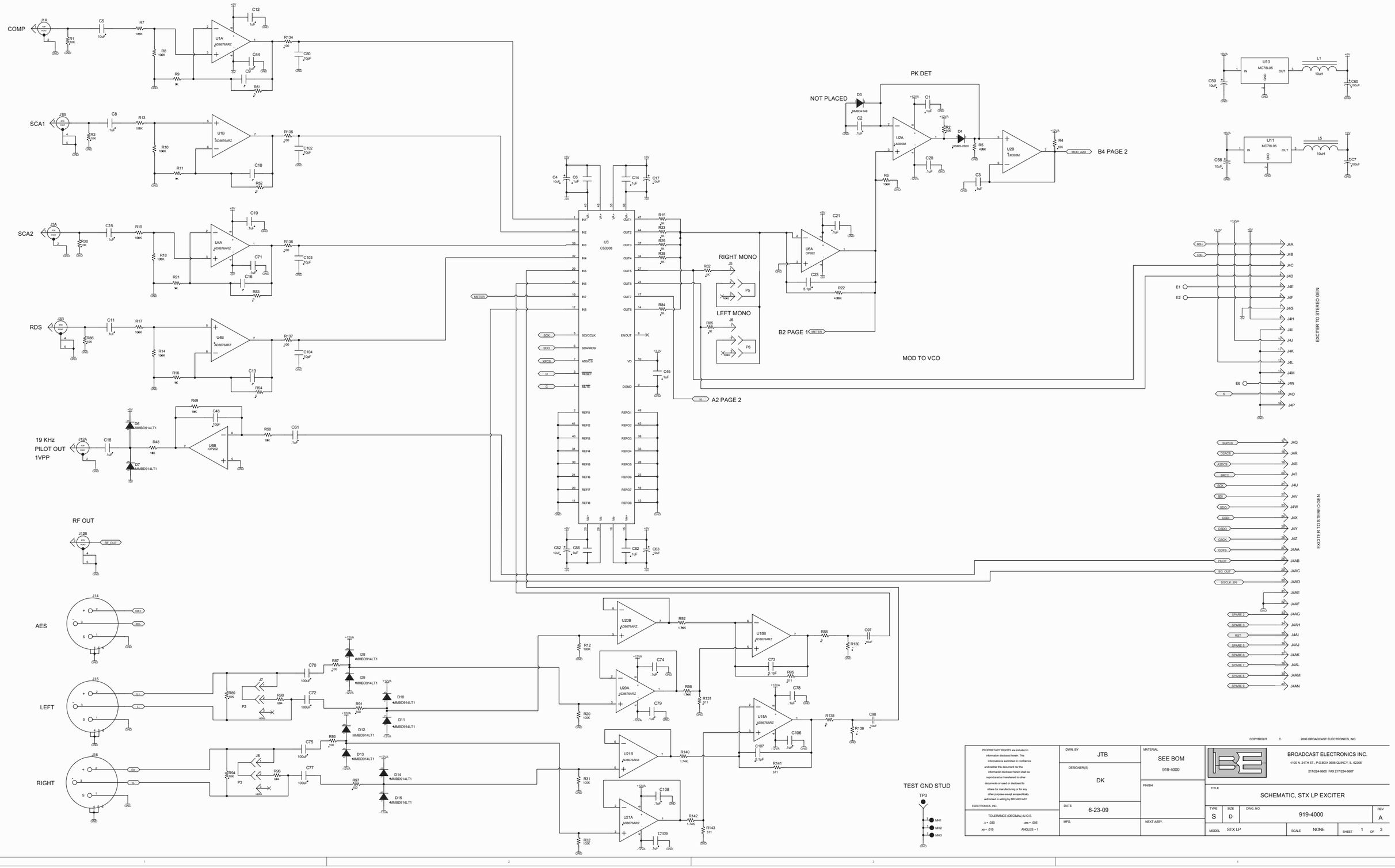

PROPRIETARY RIGHTS are included in information disclosed herein. This information is submitted in confidence and neither this document nor the information disclosed herein shall be reproduced or transferred to other documents or used or disclosed to others for manufacturing or for any other purpose except as specifically authorized in writing by BROADCAST ELECTRONICS, INC.

TOLERANCE (DECIMAL) U.O.S.
.x ± .030 .xxx ± .005
.xx ± .015 ANGLES ± 1

DWN. BY	JTB	MATERIAL	SEE BOM 919-4000
DESIGNER(S)	DK	FINISH	
DATE	6-23-09		
MFG.		NEXT ASSY.	

COPYRIGHT © 2006 BROADCAST ELECTRONICS, INC.

BROADCAST ELECTRONICS INC.
4100 N. 24TH ST., P.O.BOX 3606 QUINCY, IL 62305
217/224-9600 FAX 217/224-9607

TITLE: SCHEMATIC, STX LP EXCITER

TYPE	SIZE	DWG. NO.	REV
S	D	919-4000	A

MODEL: STX LP | SCALE: NONE | SHEET 1 OF 3

REVISIONS					
REV	DATE	DESCRIPTION	DFT/MIN	ENGR	ECN
A	6-26-09	RELEASE TO PRODUCTION	JTB	DWK	----

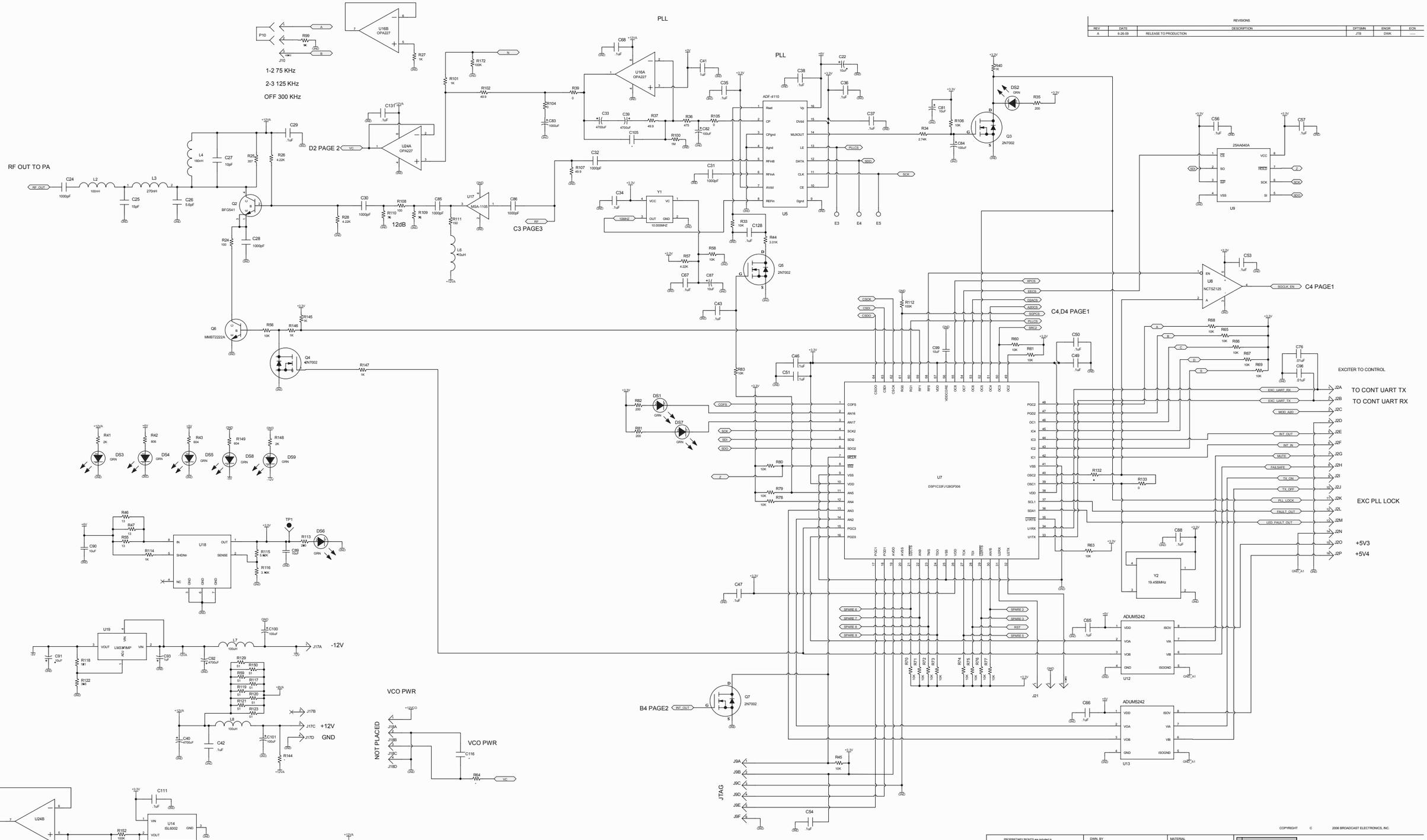

COPYRIGHT © 2006 BROADCAST ELECTRONICS, INC.

PROPRIETARY RIGHTS are included in information disclosed herein. This information is submitted in confidence and neither this document nor the information disclosed herein shall be reproduced or transferred to other documents or used or disclosed to others for manufacturing or for any other purpose except as specifically authorized in writing by BROADCAST ELECTRONICS, INC.

TOLERANCE (DECIMAL) U.O.S.
.x ± .030 .xxx ± .005
.xx ± .015 ANGLES ± 1

DWN. BY	JTB
DESIGNER(S)	DWK
DATE	6-23-09
MFG.	
MATERIAL	SEE BOM 919-4000
FINISH	
NEXT ASSY.	

BROADCAST ELECTRONICS INC.
4100 N. 24TH ST., P.O.BOX 3606 QUINCY, IL 62305
217/224-9600 FAX 217/224-9607

TITLE: SCHEMATIC, STX LP EXCITER

TYPE	SIZE	DWG. NO.	REV
S	D	919-4000	A

MODEL: STX LP SCALE: NONE SHEET 2 OF 3

REVISIONS					
REV	DATE	DESCRIPTION	DFT'SMN	ENGR	ECN
A	6-26-09	RELEASE TO PRODUCTION	JTB	DWK	----

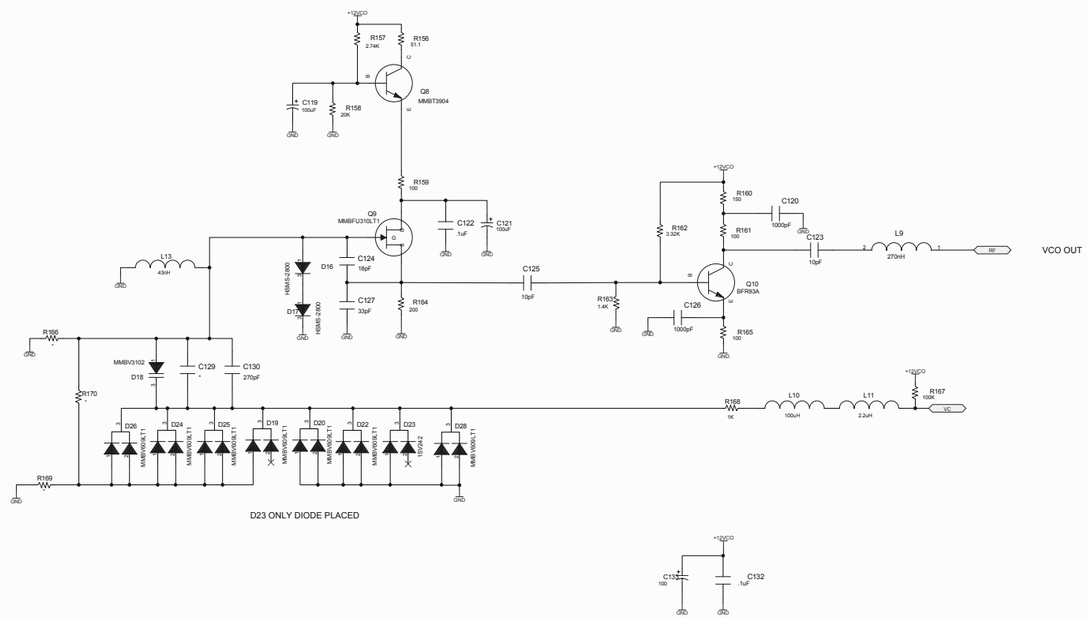

COPYRIGHT © 2006 BROADCAST ELECTRONICS, INC.

PROPRIETARY RIGHTS are included in information disclosed herein. This information is submitted in confidence and neither this document nor the information disclosed herein shall be reproduced or transferred to other documents or used or disclosed to others for manufacturing or for any other purpose except as specifically authorized in writing by BROADCAST ELECTRONICS, INC.

TOLERANCE (DECIMAL) U.O.S.
.x ± .030 .xxx ± .005
.xx ± .015 ANGLES ± 1

DWN. BY: JTB 7-25-08
DESIGNER(S): DWK
DATE:
MFG.

MATERIAL: SEE BOM
FINISH:
NEXT ASSY.

BROADCAST ELECTRONICS INC.
4100 N. 24TH ST., P.O.BOX 3606 QUINCY, IL 62305
217/224-9600 FAX 217/224-9607

TITLE: SCHEMATIC, STX LP EXCITER

TYPE	SIZE	DWG. NO.	REV
S	D	919-4000	3

MODEL: STX LP SCALE: NONE SHEET 3 OF 3

REVISIONS					
REV	DATE	DESCRIPTION	DRAFTER	APPROVED	ECN
A	8-3-09	RELEASE TO PRODUCTION	JTB		

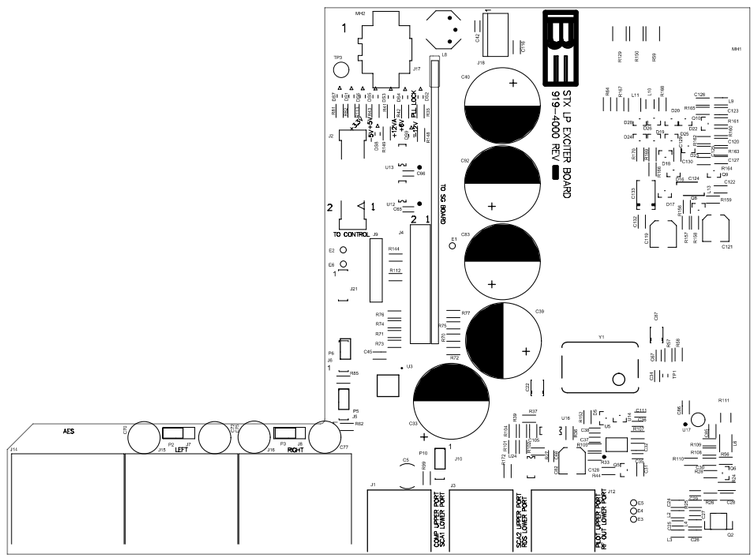

COMPONENT SIDE SILK SCREEN 519-4000 REV A

COPYRIGHT © 2008 BROADCAST ELECTRONICS, INC.

PROPRIETARY RIGHTS are included in information disclosed herein. This information is submitted in confidence and neither this document nor the information disclosed herein shall be reproduced or transferred to other documents or used or disclosed to others for manufacturing or for any other purpose except as specifically authorized in writing by BROADCAST ELECTRONICS, INC.

TOLERANCE (DECIMAL) U.O.S.
.X +_.030 .XXX +_.005
.XX +_.015 ANGLES + 1

DWN. BY JTB 9-2-08
DESIGNER(S) DK 9-23-09
PROJ. LEADER
MFG.
MATERIAL
FINISH
NEXT ASSY.

BROADCAST ELECTRONICS INC.
4100 N. 24TH ST. P.O.BOX 3606 QUINCY,IL 62305
217/224-9600 FAX 217/224-9607

TITLE STX LP EXCITER BOARD

TYPE	SIZE	DWG No.	REV
S	D	919-4000	A

MODEL STX LP SCALE 1/1 SHEET 1 OF 2

REVISIONS					
REV	DATE	DESCRIPTION	DRAFTER	APPROVED	ECN
A	8-3-09	RELEASE TO PRODUCTION	JTB		

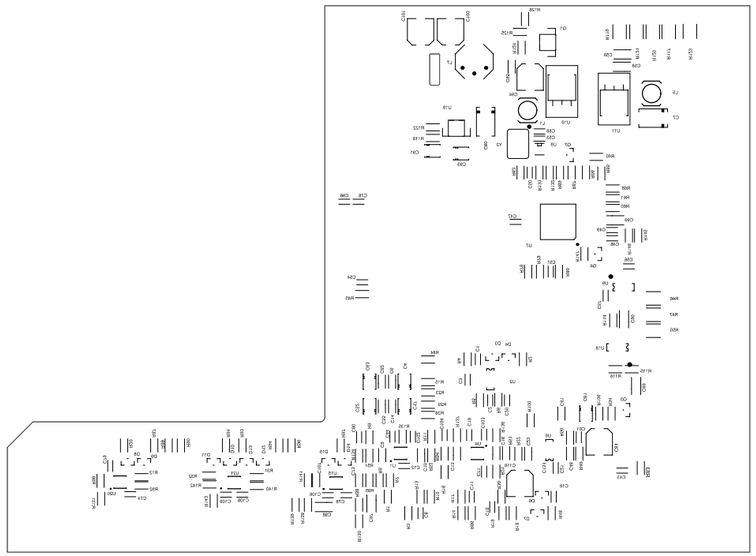

PROPRIETARY RIGHTS are included in information disclosed herein. This information is submitted in confidence and neither this document nor the information disclosed herein shall be reproduced or transferred to other documents or used or disclosed to others for manufacturing or for any other purpose except as specifically authorized in writing by BROADCAST ELECTRONICS, INC.

TOLERANCE (DECIMAL) U.O.S.
.X +_.030 .XXX +_.005
.XX +_.015 ANGLES + 1

DWN. BY JTB 9-2-08

DESIGNER(S) DK 9-23-09

PROJ. LEADER

MFG.

MATERIAL

FINISH

NEXT ASSY.

BROADCAST ELECTRONICS INC.
4100 N. 24TH ST. P.O.BOX 3606 QUINCY,IL 62305
217/224-9600 FAX 217/224-9607

TITLE STX LP EXCITER BOARD

TYPE	SIZE	DWG No.	REV
S	D	919-4000	A

MODEL STX LP SCALE 1/1 SHEET 2 OF 2

COPYRIGHT © 2008 BROADCAST ELECTRONICS, INC.

REVISIONS					
REV	DATE	DESCRIPTION	DFTSMN	ENGR	ECN
A	9-23-09	RELEASE TO PRODUCTION	JTB	KM	----
B	10-9-09	ADD VSWR SHUTDOWN CIRCUIT	JTB	KM	11713

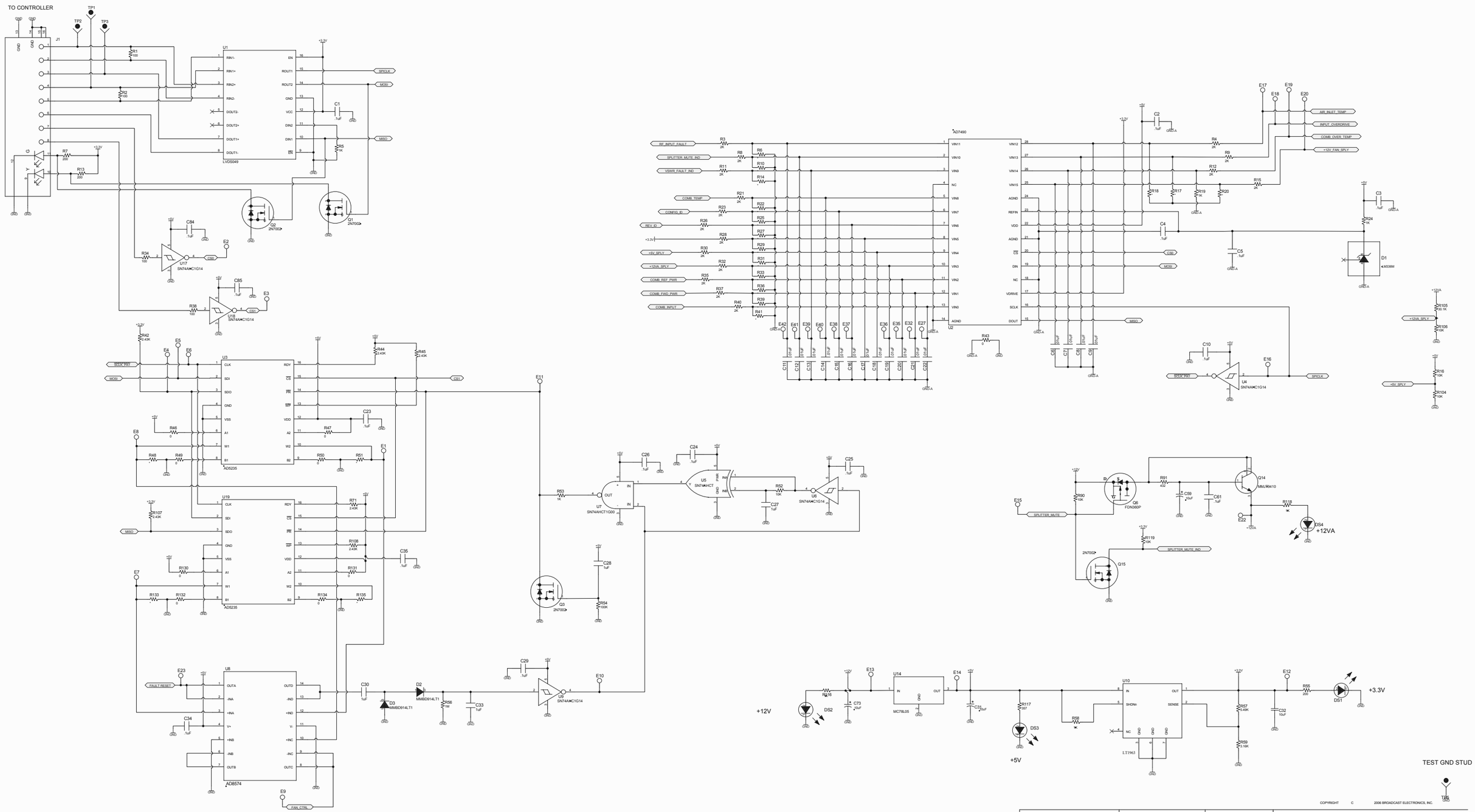

COPYRIGHT © 2006 BROADCAST ELECTRONICS, INC.

PROPRIETARY RIGHTS are included in information disclosed herein. This information is submitted in confidence and neither this document nor the information disclosed herein shall be reproduced or transferred to other documents or used or disclosed to others for manufacturing or for any other purpose except as specifically authorized in writing by BROADCAST ELECTRONICS, INC.

TOLERANCE (DECIMAL) U.O.S.
.x = .030 .xx = .005
.xx = .015 ANGLES = 1

DWN. BY	JTB	MATERIAL	SEE BOM 919-4005
DESIGNER(S)	KM	FINISH	
DATE	5-23-09		
MFG.		NEXT ASSY.	

BROADCAST ELECTRONICS INC.
4100 N. 24TH ST., P.O.BOX 3606 QUINCY, IL 62305
217/224-9600 FAX 217/224-9607

TITLE: STX LP RF SPLITTER BOARD

TYPE	SIZE	DWG. NO.	REV
S	D	919-4005	B

MODEL: STX LP SCALE: NONE SHEET 1 OF 2

REVISIONS					
REV	DATE	DESCRIPTION	DFT'MN	ENGR	ECN
A	9-23-09	RELEASE TO PRODUCTION	JTB	KM	----
B	10-9-09	ADD VSWR SHUTDOWN CIRCUIT	JTB	KM	11713

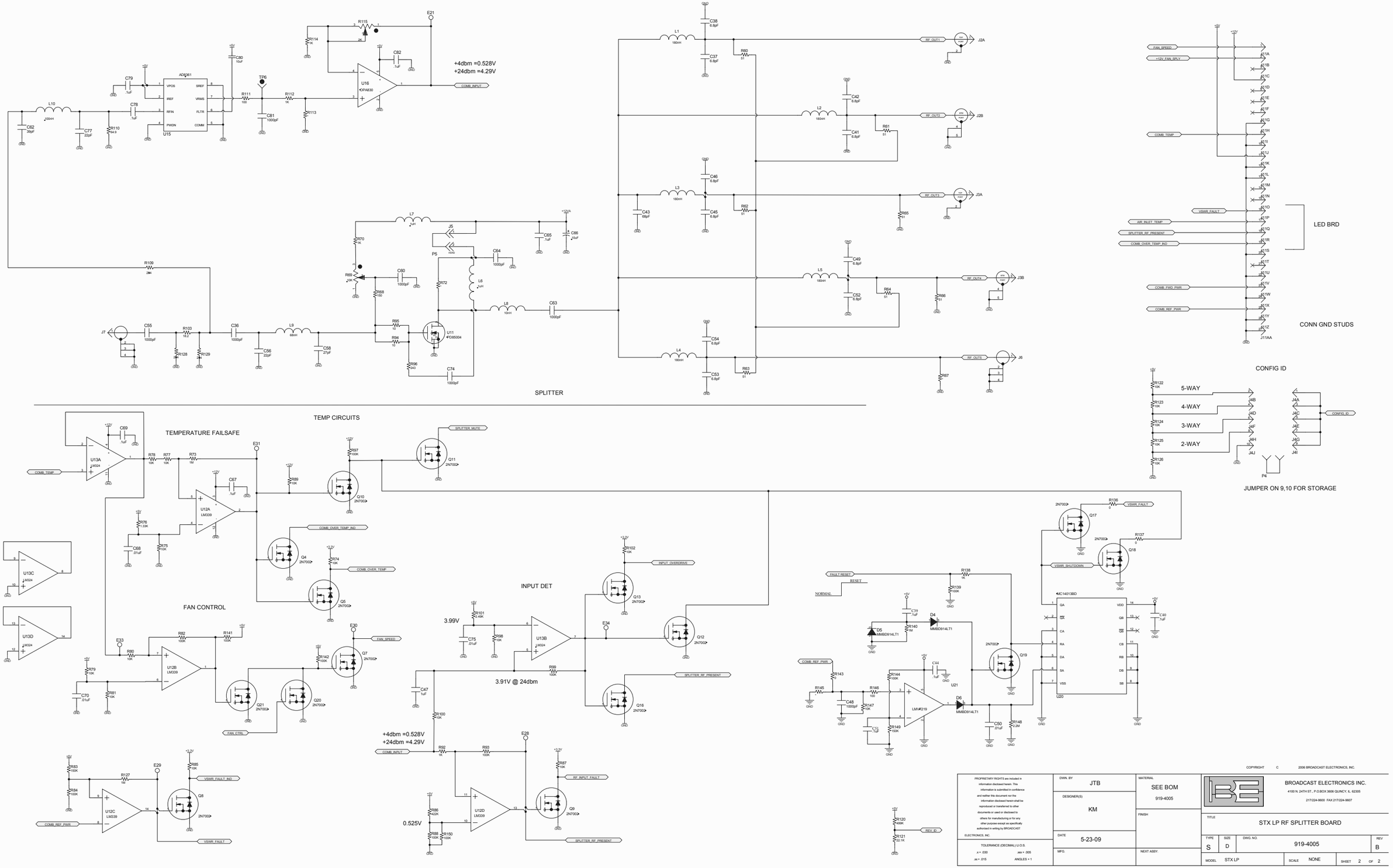

PROPRIETARY RIGHTS are included in information disclosed herein. This information is submitted in confidence and neither this document nor the information disclosed herein shall be reproduced or transferred to other documents or used or disclosed to others for manufacturing or for any other purpose except as specifically authorized in writing by BROADCAST ELECTRONICS, INC.

TOLERANCE (DECIMAL) U.O.S.
.x ± .030 .xx ± .005
.xx ± .015 ANGLES ± 1

DWN. BY	JTB	MATERIAL	SEE BOM 919-4005
DESIGNER(S)	KM	FINISH	
DATE	5-23-09	NEXT ASSY.	
MFG.			

COPYRIGHT © 2006 BROADCAST ELECTRONICS, INC.

BROADCAST ELECTRONICS INC.
4100 N. 24TH ST., P.O.BOX 3606 QUINCY, IL. 62305
217/224-9600 FAX 217/224-9607

TITLE: STX LP RF SPLITTER BOARD

TYPE	SIZE	DWG. NO.	REV
S	D	919-4005	B

MODEL: STX LP SCALE: NONE SHEET 2 OF 2

REVISIONS					
REV	DATE	DESCRIPTION	DRAFTER	APPROVED	ECN
A	8-22-09	RELEASE TO PRODUCTION	JTB	DWK	----
B	10-10-09	ADD VSWR SHUTDOWN CIRCUIT	JTB	KM	11713

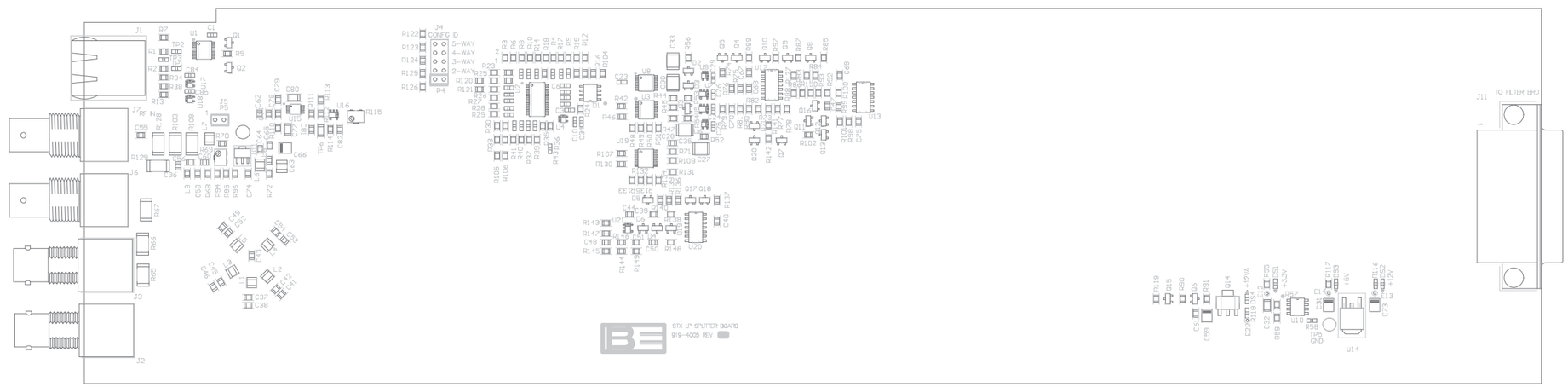

TOP ASSY

COMPONENT SIDE SILK SCREEN 519-4005 REV B

PROPRETARY RIGHTS are included in information disclosed herein. This information is submitted in confidence and neither this document nor the information disclosed herein shall be reproduced or transferred to other documents or used or disclosed to others for manufacturing or for any other purpose except as specifically authorized in writing by BROADCAST ELECTRONICS, INC.

TOLERANCE (DECIMAL) U.O.S.
.X + .030 .XXX + .005
.XX + .015 ANGLES + 1

DWN. BY JTB 3-5-09
DESIGNER(S) KM 6-8-09
PROJ. LEADER
MFG.
MATERIAL
FINISH
NEXT ASSY.

BROADCAST ELECTRONICS INC.
4100 N. 24TH ST. P.O.BOX 3606 QUINCY,IL 62305
217/224-9600 FAX 217/224-9607

TITLE STX LP SPLITTER BOARD

TYPE	SIZE	DWG No.	REV
A		919-4005	B

MODEL XPi 10esp SCALE 1/1 SHEET 1 OF 2

COPYRIGHT © 2009 BROADCAST ELECTRONICS, INC.

REVISIONS					
REV	DATE	DESCRIPTION	DFTSMN	ENGR	ECN
A	10-09-09	RELEASE TO PRODUCTION	JTB	KM	----

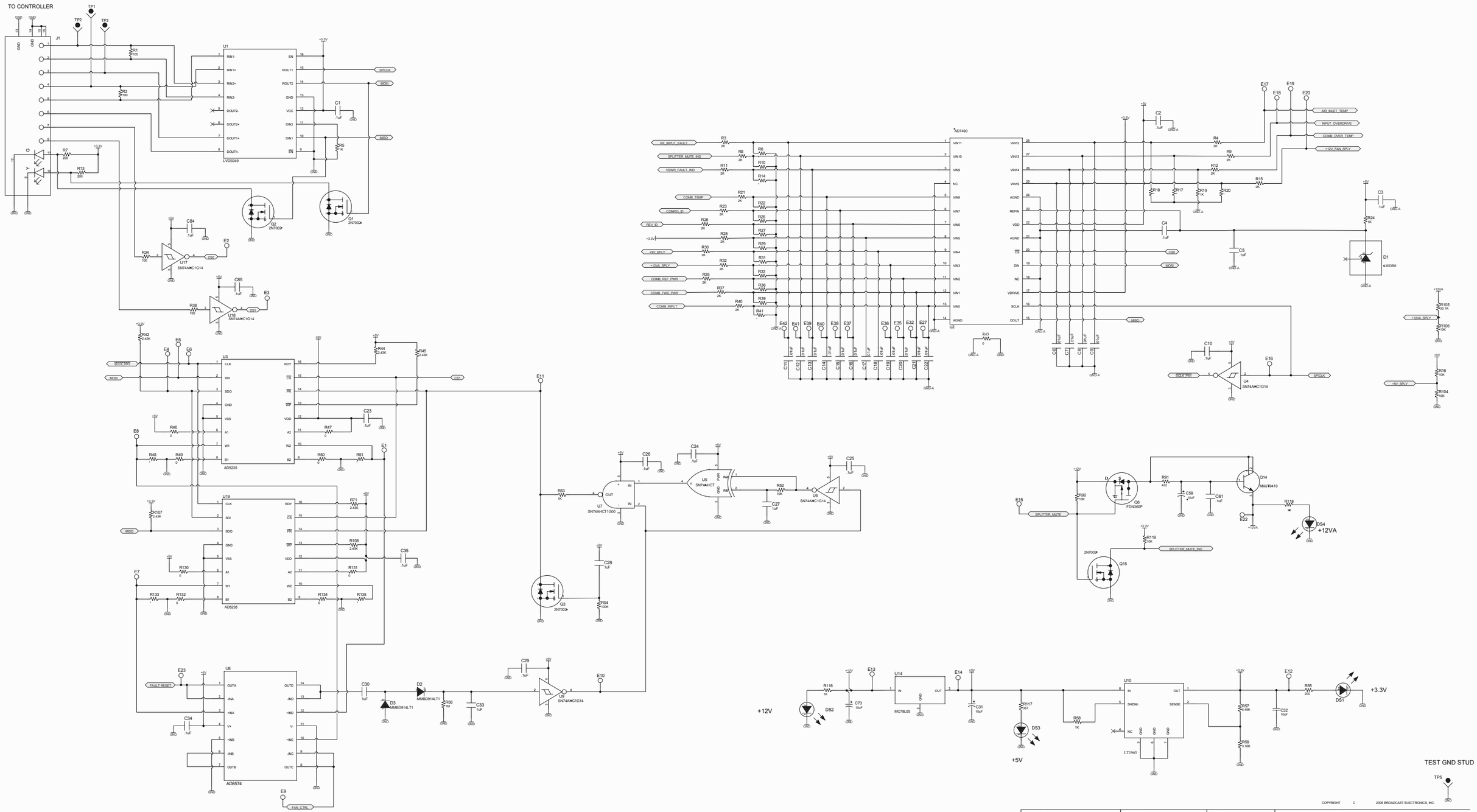

COPYRIGHT © 2006 BROADCAST ELECTRONICS, INC.

PROPRIETARY RIGHTS are included in information disclosed herein. This information is submitted in confidence and neither this document nor the information disclosed herein shall be reproduced or transferred to other documents or used or disclosed to others for manufacturing or for any other purpose except as specifically authorized in writing by BROADCAST ELECTRONICS, INC.

TOLERANCE (DECIMAL) U.O.S.
.x = .030 .xxx = .005
.xx = .015 ANGLES = 1

DWN. BY	JTB	MATERIAL	SEE BOM 919-4005-001
DESIGNER(S)	KM	FINISH	
DATE	5-23-09		
MFG.		NEXT ASSY.	

BROADCAST ELECTRONICS INC.
4100 N. 24TH ST., P.O.BOX 3606 QUINCY, IL 62305
217/224-9600 FAX 217/224-9607

TITLE: STX LP RF SPLITTER BOARD

TYPE	SIZE	DWG. NO.	REV
S	D	919-4005-001	A

MODEL: STX LP SCALE: NONE SHEET 1 OF 2

REVISIONS					
REV	DATE	DESCRIPTION	DRAFTER	APPROVED	ECN
A	11-09-09	RELEASE TO PRODUCTION	JTB	KM	----

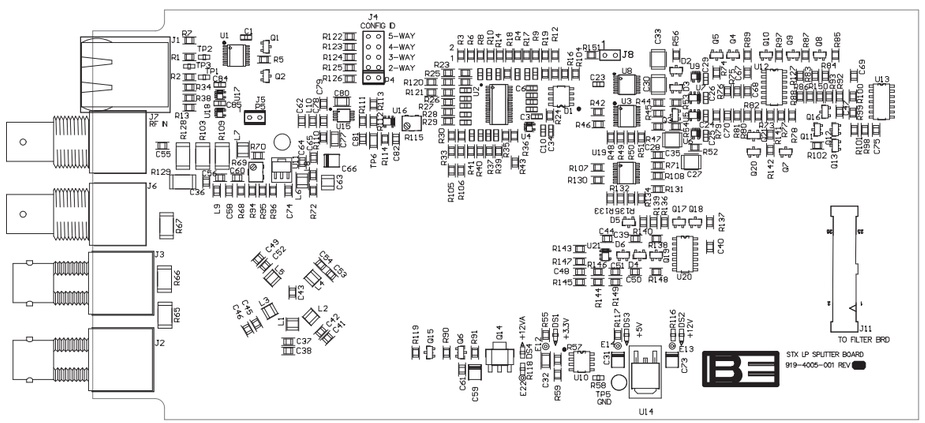

COMPONENT SIDE SILK SCREEN 519-4005-001 REV A

COPYRIGHT © 2009 BROADCAST ELECTRONICS, INC.

PROPRIETARY RIGHTS are included in information disclosed herein. This information is submitted in confidence and neither this document nor the information disclosed herein shall be reproduced or transferred to other documents or used or disclosed to others for manufacturing or for any other purpose except as specificaly authorized in writing by BROADCAST ELECTRONICS, INC.

TOLERANCE (DECIMAL) U.O.S.
.X + .030 .XXX + .005
.XX + .015 ANGLES + 1

DWN. BY: JTB 3-5-09
DESIGNER(S): KM 11-8-09
PROJ. LEADER:
MFG.:
MATERIAL:
FINISH:
NEXT ASSY.:

BROADCAST ELECTRONICS INC.
4100 N. 24TH ST. P.O.BOX 3606 QUINCY,IL 62305
217/224-9600 FAX 217/224-9607

TITLE: STX LP SPLITTER BOARD

TYPE	SIZE	DWG No.	REV
A		919-4005-001	A

MODEL: STX LP SCALE: 1/1 SHEET 1 OF 2

REVISIONS					
REV	DATE	DESCRIPTION	DRAFTER	APPROVED	ECN
A	11-09-09	RELEASE TO PRODUCTION	JTB	KM	----

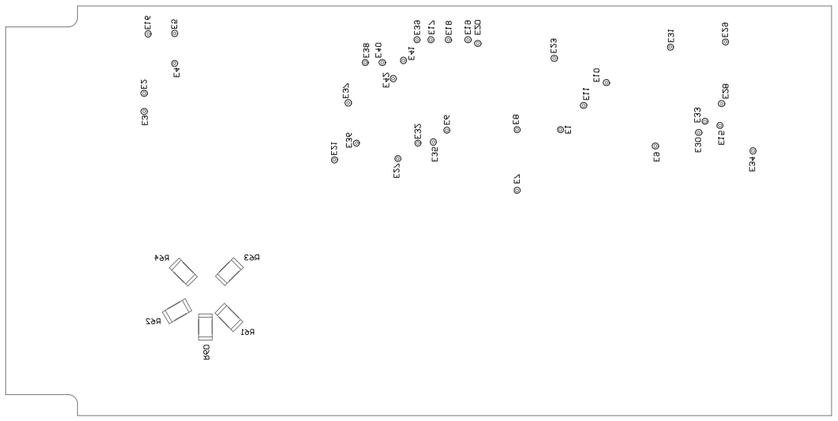

COPYRIGHT © 2009 BROADCAST ELECTRONICS, INC.

PROPRIETARY RIGHTS are included in information disclosed herein. This information is submitted in confidence and neither this document nor the information disclosed herein shall be reproduced or transferred to other documents or used or disclosed to others for manufacturing or for any other purpose except as specificaly authorized in writing by BROADCAST ELECTRONICS, INC.

TOLERANCE (DECIMAL) U.O.S.
.X + .030 .XXX + .005
.XX + .015 ANGLES + 1

DWN. BY JTB 3-5-09
DESIGNER(S) KM 11-8-09
PROJ. LEADER
MFG.

MATERIAL
FINISH
NEXT ASSY.

BROADCAST ELECTRONICS INC.
4100 N. 24TH ST. P.O.BOX 3606 QUINCY,IL. 62305
217/224-9600 FAX 217/224-9607

TITLE STX LP SPLITTER BOARD

TYPE	SIZE	DWG No.	REV
A	D	919-4005-001	A

MODEL STX LP SCALE 1/1 SHEET 2 OF 2

REVISIONS					
REV	DATE	DESCRIPTION	DFTSMN	ENGR	ECN
A	11-09-09	RELEASE TO PRODUCTION	JTB	KM	----

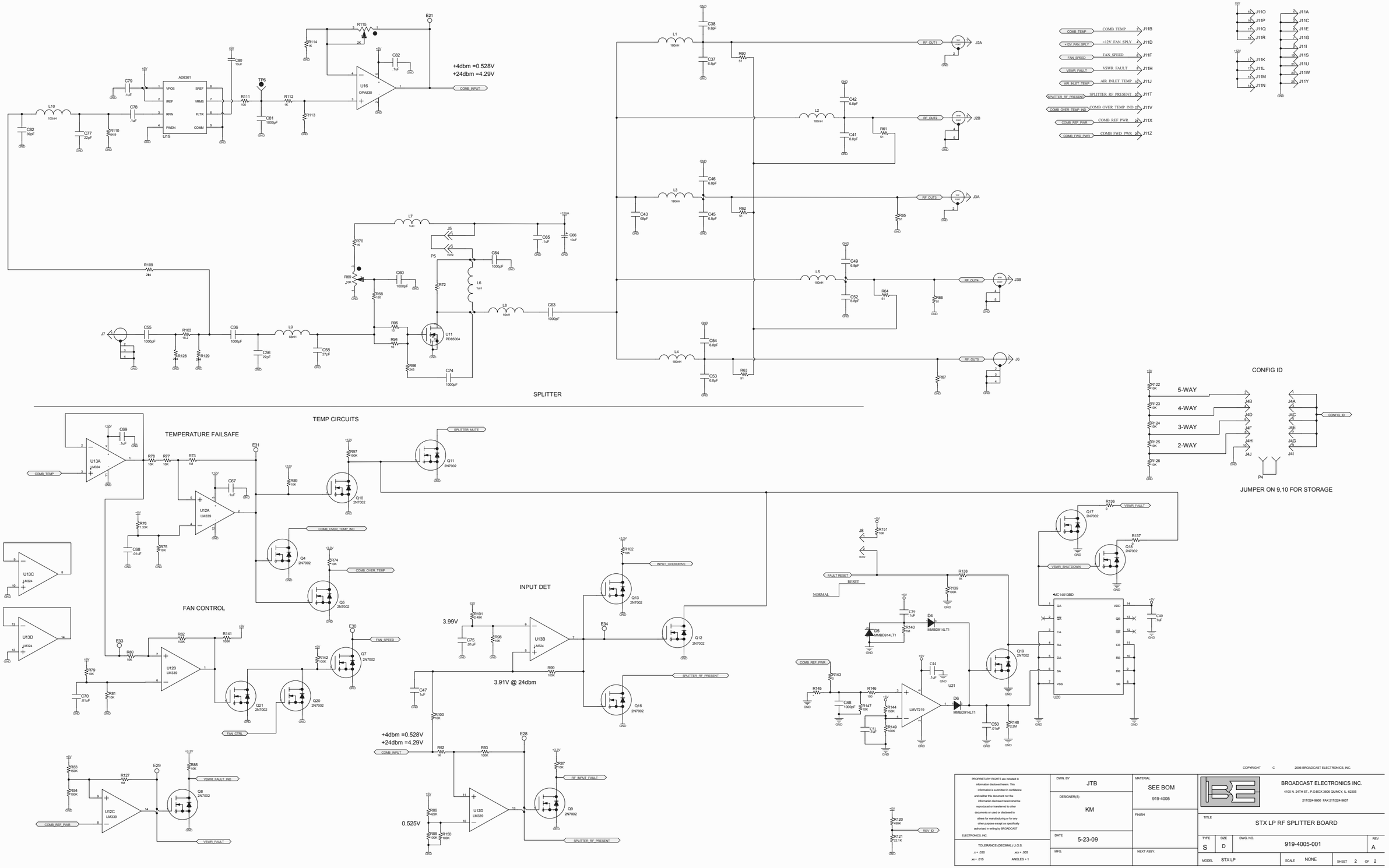

PROPRIETARY RIGHTS are included in information disclosed herein. This information is submitted in confidence and neither this document nor the information disclosed herein shall be reproduced or transferred to other documents or used or disclosed to others for manufacturing or for any other purpose except as specifically authorized in writing by BROADCAST ELECTRONICS, INC.

TOLERANCE (DECIMAL) U.O.S.
.x ± .030 .xx ± .005
.xx ± .015 ANGLES ± 1

DWN. BY	JTB	MATERIAL	SEE BOM 919-4005
DESIGNER(S)	KM	FINISH	
DATE	5-23-09	NEXT ASSY.	
MFG.			

COPYRIGHT © 2006 BROADCAST ELECTRONICS, INC.

BROADCAST ELECTRONICS INC.
4100 N. 24TH ST., P.O.BOX 3606 QUINCY, IL. 62305
217/224-9600 FAX 217/224-9607

TITLE: STX LP RF SPLITTER BOARD

TYPE	SIZE	DWG. NO.	REV
S	D	919-4005-001	A

MODEL STX LP SCALE NONE SHEET 2 OF 2

REVISIONS					
REV	DATE	DESCRIPTION	DFTSMN	ENGR	ECN
B	1-25-10	WAS 919-4005-001,CHG R76 (102-2214)	JTB	KM	11746
C	6-14-10	CHG R120 TO 102-3323 (SHT 2)	JTB		11790

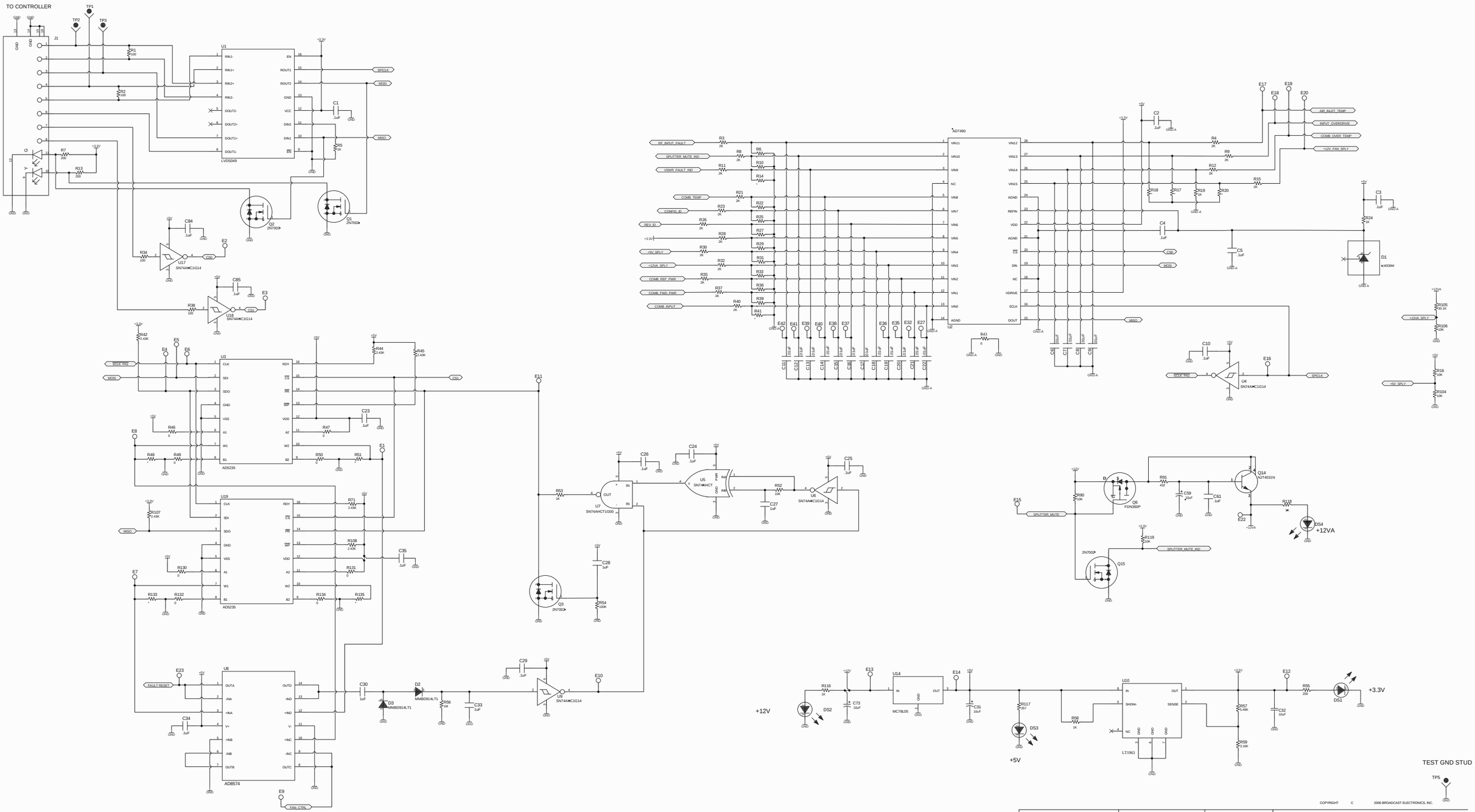

PROPRIETARY RIGHTS are included in information disclosed herein. This information is submitted in confidence and neither this document nor the information disclosed herein shall be reproduced or transferred to other documents or used or disclosed to others for manufacturing or for any other purpose except as specifically authorized in writing by BROADCAST ELECTRONICS, INC.

TOLERANCE (DECIMAL) U.O.S.
.x = .030 .xx = .005
.xx = .015 ANGLES = 1

DWN. BY: JTB
DESIGNER(S): KM
DATE: 5-23-09
MFG.

MATERIAL: SEE BOM 919-4005-103
FINISH
NEXT ASSY.

COPYRIGHT © 2006 BROADCAST ELECTRONICS, INC.

BROADCAST ELECTRONICS INC.
4100 N. 24TH ST., P.O.BOX 3606 QUINCY, IL 62305
217/224-9600 FAX 217/224-9607

TITLE: STX LP RF SPLITTER BOARD

TYPE	SIZE	DWG. NO.	REV
S	D	919-4005-103	C

MODEL: STX LP SCALE: NONE SHEET 1 OF 2

REVISIONS					
REV	DATE	DESCRIPTION	DFTSMN	ENGR	ECN
B	1-25-10	WAS 919-4005-001,CHG R76 (102-2214)	JTB	KM	11746
C	6-14-10	CHG R120 TO 102-3323 (SHT 2)	JTB		11790

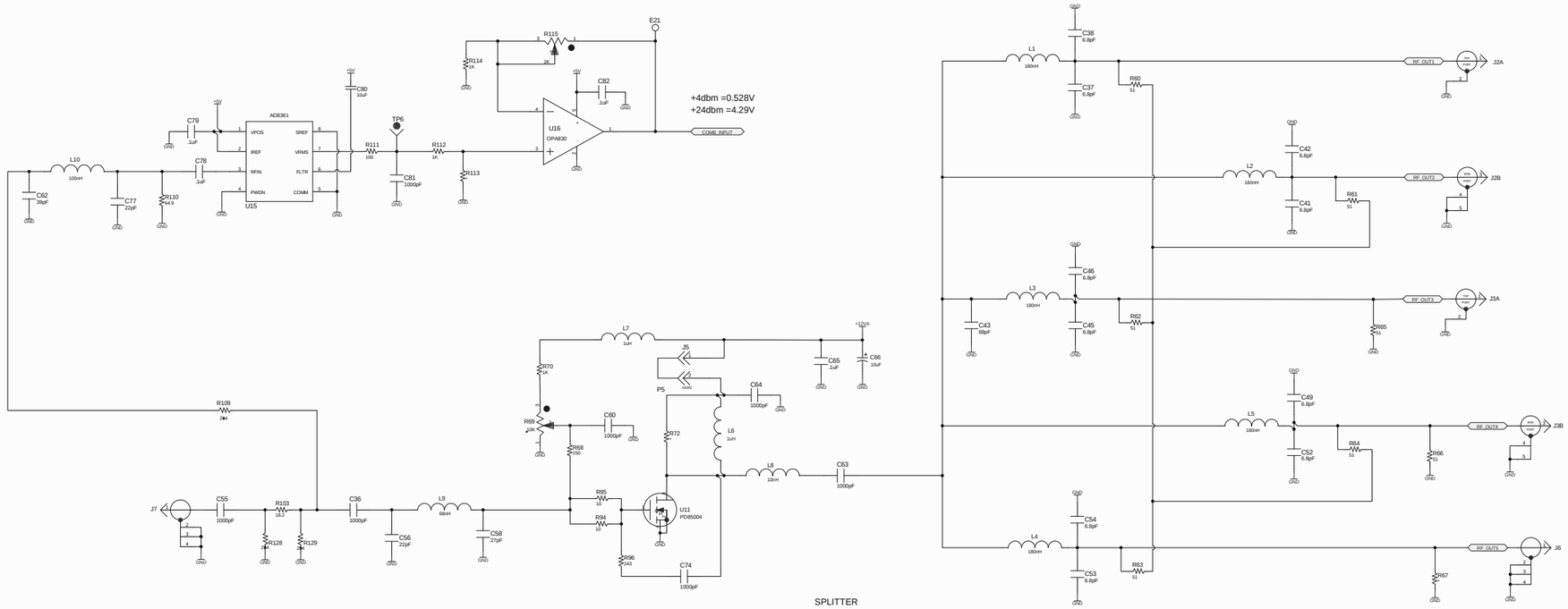

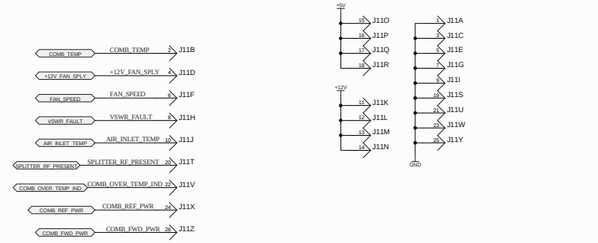

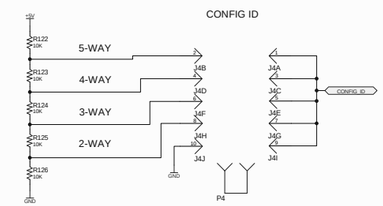

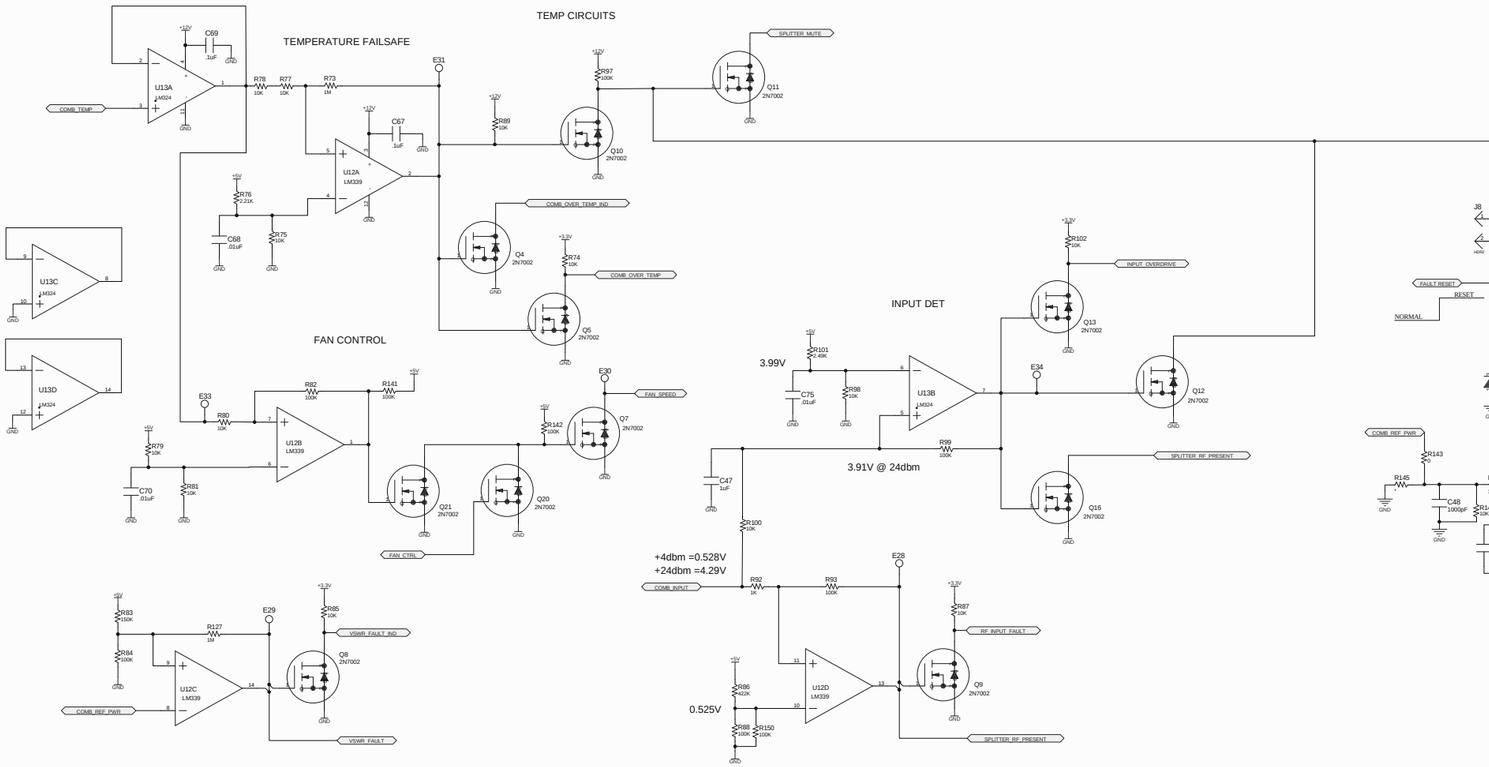

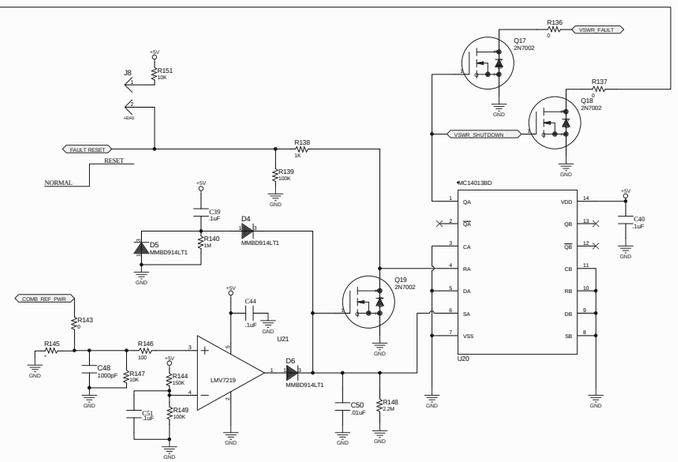

PROPRIETARY RIGHTS are included in information disclosed herein. This information is submitted in confidence and neither this document nor the information disclosed herein shall be reproduced or transferred to other documents or used or disclosed to others for manufacturing or for any other purpose except as specifically authorized in writing by BROADCAST ELECTRONICS, INC.

TOLERANCE (DECIMAL) U.O.S.
.x ± .030 .xxx ± .005
.xx ± .015 ANGLES ± 1

DWN. BY	JTB	MATERIAL	SEE BOM 919-4005-103
DESIGNER(S)	KM	FINISH	
DATE	5-23-09	NEXT ASSY.	
MFG.			

COPYRIGHT © 2006 BROADCAST ELECTRONICS, INC.

BROADCAST ELECTRONICS INC.
4100 N. 24TH ST., P.O.BOX 3606 QUINCY, IL. 62305
217/224-9600 FAX 217/224-9607

TITLE: STX LP RF SPLITTER BOARD

TYPE	SIZE	DWG. NO.	REV
S	D	919-4005-103	C

MODEL: STX LP SCALE: NONE SHEET 2 OF 2

REVISIONS					
REV	DATE	DESCRIPTION	DRAFTER	APPROVED	ECN
B	1–25–10	MADE 4005–103, WAS 4005–001	JTB	KM	11746
C	6–14–10	MADE R120 102–3323	JTB	DF	11790

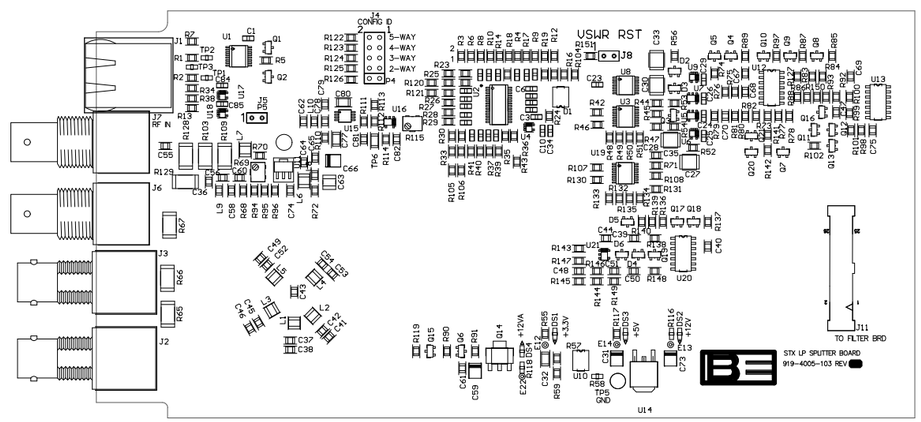

SEE GRAPH FOR DIFFERENT CONFIGURATIONS

COMPONENT SIDE SILK SCREEN 519–4005–103 REV C

TOP ASSY

STX SPLITTER	–102 2KW	–103 3KW	–105 5KW
J3			ADD
J6	REMOVE		
R65			REMOVE
R66			REMOVE
R67	ADD		

COPYRIGHT © 2009 BROADCAST ELECTRONICS, INC.

PROPRIETARY RIGHTS are included in information disclosed herein. This information is submitted in confidence and neither this document nor the information disclosed herein shall be reproduced or transferred to other documents or used or disclosed to others for manufacturing or for any other purpose except as specifically authorized in writing by BROADCAST ELECTRONICS, INC.

TOLERANCE (DECIMAL) U.O.S.
.X + .030 .XXX + .005
.XX + .015 ANGLES + 1

DWN. BY JTB 3–5–09

DESIGNER(S) KM 11–8–09

PROJ. LEADER

MFG.

MATERIAL

FINISH

NEXT ASSY.

BROADCAST ELECTRONICS INC.
4100 N. 24TH ST. P.O.BOX 3606 QUINCY,IL 62305
217/224–9600 FAX 217/224–9607

TITLE STX LP SPLITTER BOARD

TYPE	SIZE	DWG No.	REV
A		919–4005–103	C

MODEL STX LP SCALE 1/1 SHEET 1 OF 2

REVISIONS					
REV	DATE	DESCRIPTION	DRAFTER	APPROVED	ECN
B	1–25–10	MADE 4005–103,WAS4005–001	JTB	KM	11746
C	6–14–10	MADE R120 102–3323	JTB	DF	11790

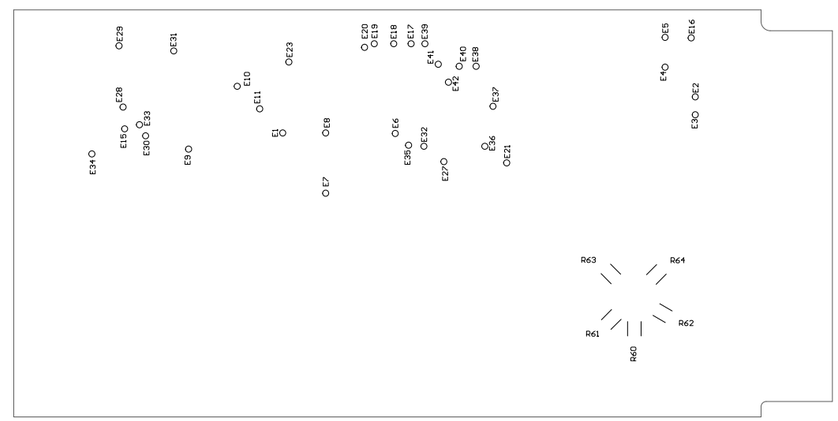

SOLDER SIDE SILK SCREEN 519–4005–103 REV C

BTM ASSY

PROPRIETARY RIGHTS are included in information disclosed herein. This information is submitted in confidence and neither this document nor the information disclosed herein shall be reproduced or transferred to other documents or used or disclosed to others for manufacturing or for any other purpose except as specifically authorized in writing by BROADCAST ELECTRONICS, INC.

TOLERANCE (DECIMAL) U.O.S.
.X + .030 .XXX + .005
.XX + .015 ANGLES + 1

DWN. BY JTB 3–5–09
DESIGNER(S) KM 11–8–09
PROJ. LEADER
MFG.
MATERIAL
FINISH
NEXT ASSY.

BROADCAST ELECTRONICS INC.
4100 N. 24TH ST. P.O.BOX 3606 QUINCY,IL. 62305
217/224–9600 FAX 217/224–9607

TITLE STX LP SPLITTER BOARD

TYPE	SIZE	DWG No.	REV
A	D	919–4005–103	C

MODEL STX LP SCALE 1/1 SHEET 2 OF 2

COPYRIGHT © 2009 BROADCAST ELECTRONICS, INC.

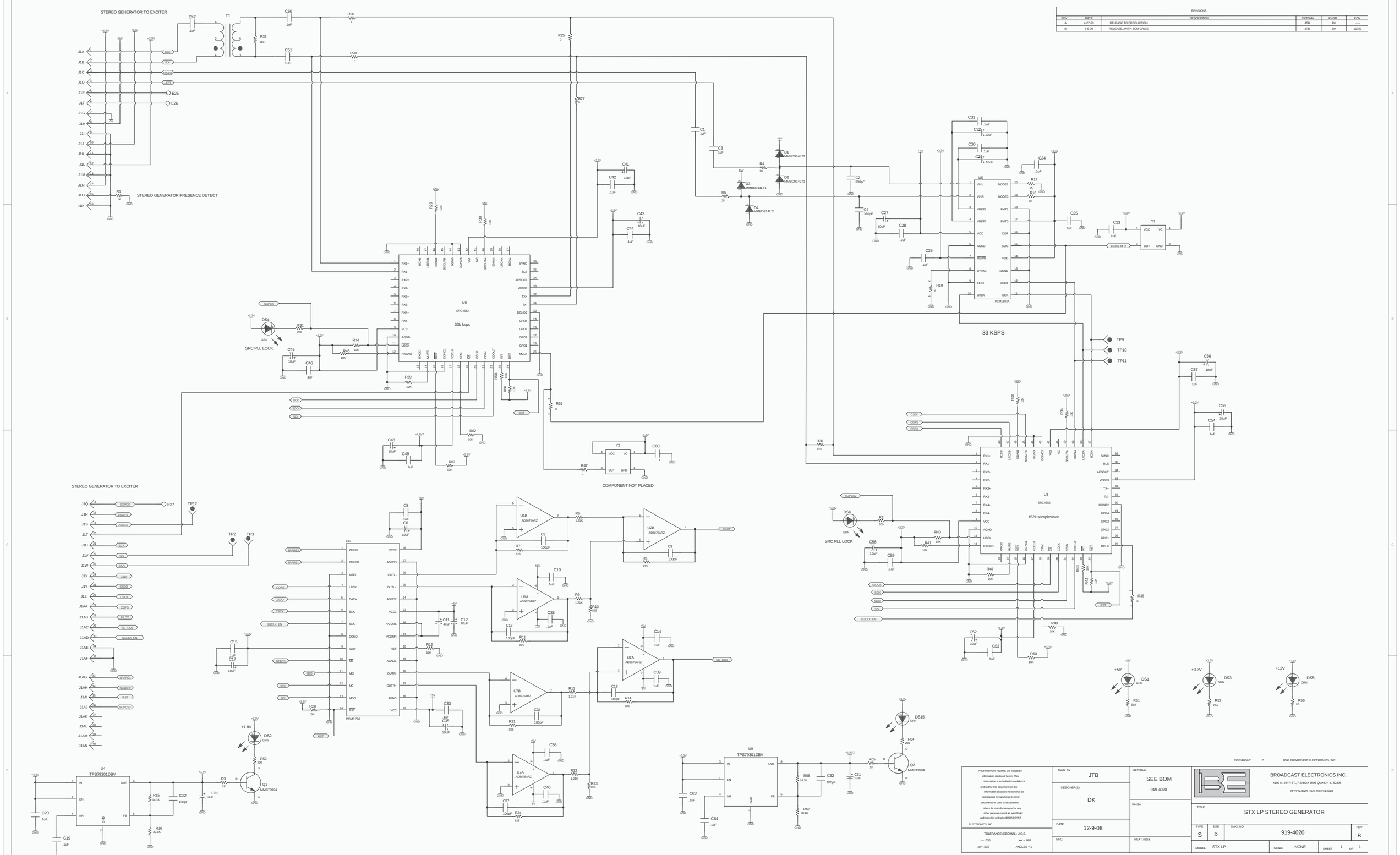

REVISIONS					
REV	DATE	DESCRIPTION	DFT'SMN	ENGR	ECN
A	4-27-09	RELEASE TO PRODUCTION	JTB	DK	----
B	8-5-09	RELEASE_WITH BOM CHG'S	JTB	DK	11702

PROPRIETARY RIGHTS are included in information disclosed herein. This information is submitted in confidence and neither this document nor the information disclosed herein shall be reproduced or transferred to other documents or used or disclosed to others for manufacturing or for any other purpose except as specifically authorized in writing by BROADCAST ELECTRONICS, INC.

TOLERANCE (DECIMAL) U.O.S.
.x ± .030 .xx ± .005
.xx ± .015 ANGLES ± 1

DWN. BY: JTB
DESIGNER(S): DK
DATE: 12-9-08
MFG.

MATERIAL: SEE BOM 919-4020
FINISH
NEXT ASSY.

COPYRIGHT © 2006 BROADCAST ELECTRONICS, INC.

BROADCAST ELECTRONICS INC.
4100 N. 24TH ST., P.O.BOX 3606 QUINCY, IL 62305
217/224-9600 FAX 217/224-9607

TITLE: STX LP STEREO GENERATOR

TYPE	SIZE	DWG. NO.	REV
S	D	919-4020	B

MODEL: STX LP SCALE: NONE SHEET 1 OF 1

REVISIONS				
REV	DATE	DESCRIPTION	DRAFTER	ECN
A	5-12-09	RELEASE TO PRODUCTION	JTB	----
B	8-19-09	CONNECT C1 TO R5,R17 TO GND	JTB	11702

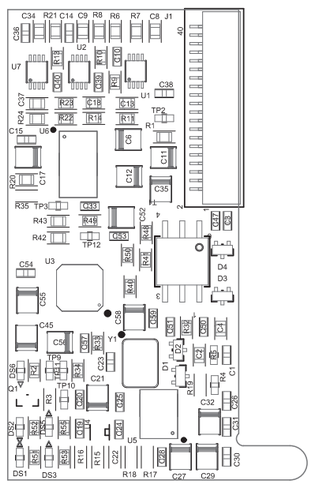

COMPONENT SIDE SILKSCREEN A/W 519-4020 REV B

DESIGNER JTB	MATERIAL
ENGINEER DK	FINISH ENIG

PROPRIETARY RIGHTS are included in information disclosed herein. This information is submitted in confidence and neither this document nor the information disclosed herein shall be reproduced or transferred to other documents or used or disclosed to others for manufacturing or for any other purpose except as specifically authorized in writing by BROADCAST ELECTRONICS, INC.

TOLERANCE U.O.S.
.x + .030
.xx + .015
.xxx + .005
ANGLES + 1

BROADCAST ELECTRONICS INC.
4100 N. 24TH ST., P.O.BOX 3606 QUINCY, IL. 62305
217/224-9600 FAX 217/224-9607

TITLE STEREO GENERATOR

TYPE A M | SIZE C | DWG. NO. 919-4020 | REV B

MODEL STX LP | SCALE 1/1 | SHEET 1 OF 2

REVISIONS				
REV	DATE	DESCRIPTION	DRAFTER	ECN
A	5-12-09	RELEASE TO PRODUCTION	JTB	---
B	9-19-09	CONNECT C1 TO R5: R17 TO GND	JTB	11702

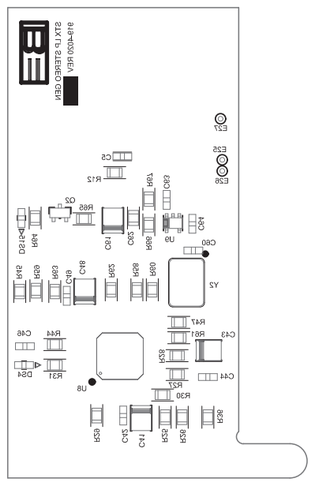

SOLDER SIDE SILKSCREEN A/W 919-4020 REV B

DESIGNER JTB	MATERIAL
ENGINEER DK	FINISH ENIG

PROPRIETARY RIGHTS are included in information disclosed herein. This information is submitted in confidence and neither this document nor the information disclosed herein shall be reproduced or transferred to other documents or used or disclosed to others for manufacturing or for any other purpose except as specifically authorized in writing by BROADCAST ELECTRONICS, INC.

TOLERANCE U.O.S.
.x + .030
.xx + .015
.xxx + .005
ANGLES + 1

BROADCAST ELECTRONICS INC.
4100 N. 24TH ST., P.O.BOX 3606 QUINCY, IL. 62305
217/224-9600 FAX 217/224-9607

TITLE STEREO GENERATOR

TYPE M | SIZE C | DWG. NO. 919-4020 | REV B

MODEL STX LP | SCALE 1/1 | SHEET 2 OF 2

REVISIONS				
REV	DATE	DESCRIPTION	DRAFTER	ECN
A	9-20-09	RELEASE TO PRODUCTION	JTB	
B	11-6-09	CHG C5,C11,C17 TO NOT PLACED..ADD R22 102-1002	JTB	11725

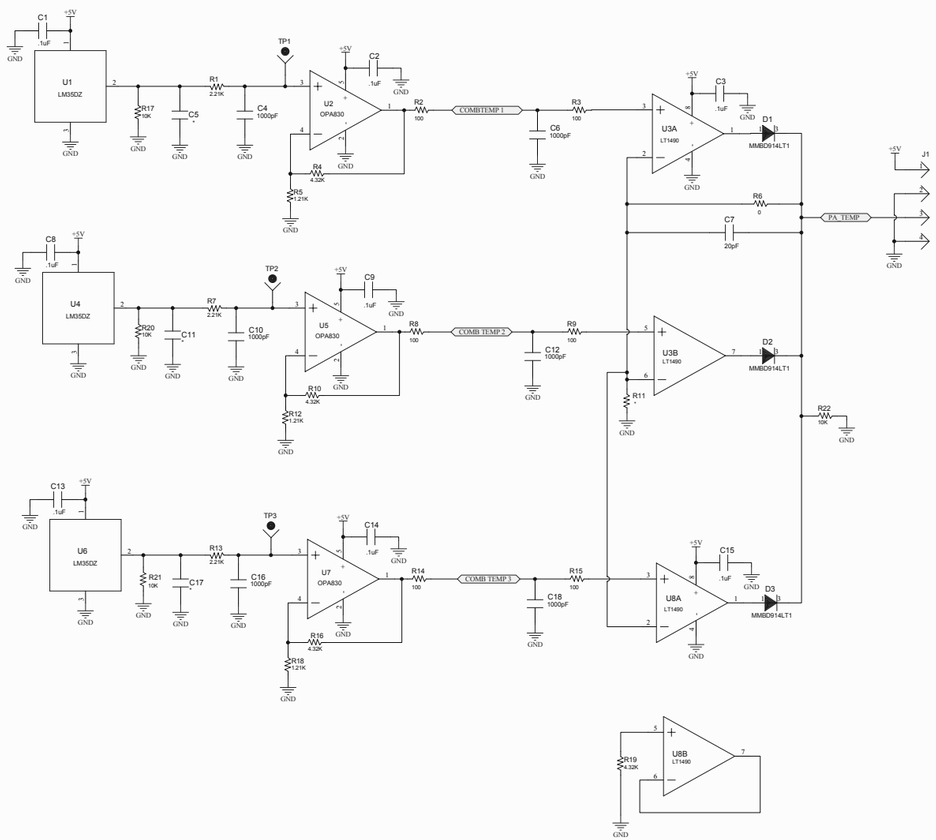

DESIGNER J BRENNAN	MATERIAL	BROADCAST ELECTRONICS INC. 4100 N. 24TH ST., P.O.BOX 3606 QUINCY, IL 62305 217:224-9600 FAX 217:224-9607	
ENGINEER K MURPHY	FINISH		
PROPRIETARY RIGHTS are included in information disclosed herein. This information is submitted in confidence and neither this document nor the information disclosed herein shall be reproduced or transferred to other documents or used or disclosed to others for manufacturing or for any other purpose except as specifically authorized in writing by BROADCAST ELECTRONICS, INC.	TOLERANCE U.O.S. .x ± .030 .xx ± .015 .xxx ± .005 ANGLES ± 1	TITLE TEMP SENSE BACKER BOARD	
		TYPE S SIZE D DWG. NO. 919-4025	REV B
		MODEL STX LP SCALE	SHEET 1 OF 1

REVISIONS				
REV	DATE	DESCRIPTION	DRAFTER	ECN
A	6-2-09	RELEASE TO PRODUCTION	JTB	
B	11-6-09	ADD R22, CH C5,C11,C17	JTB	11725

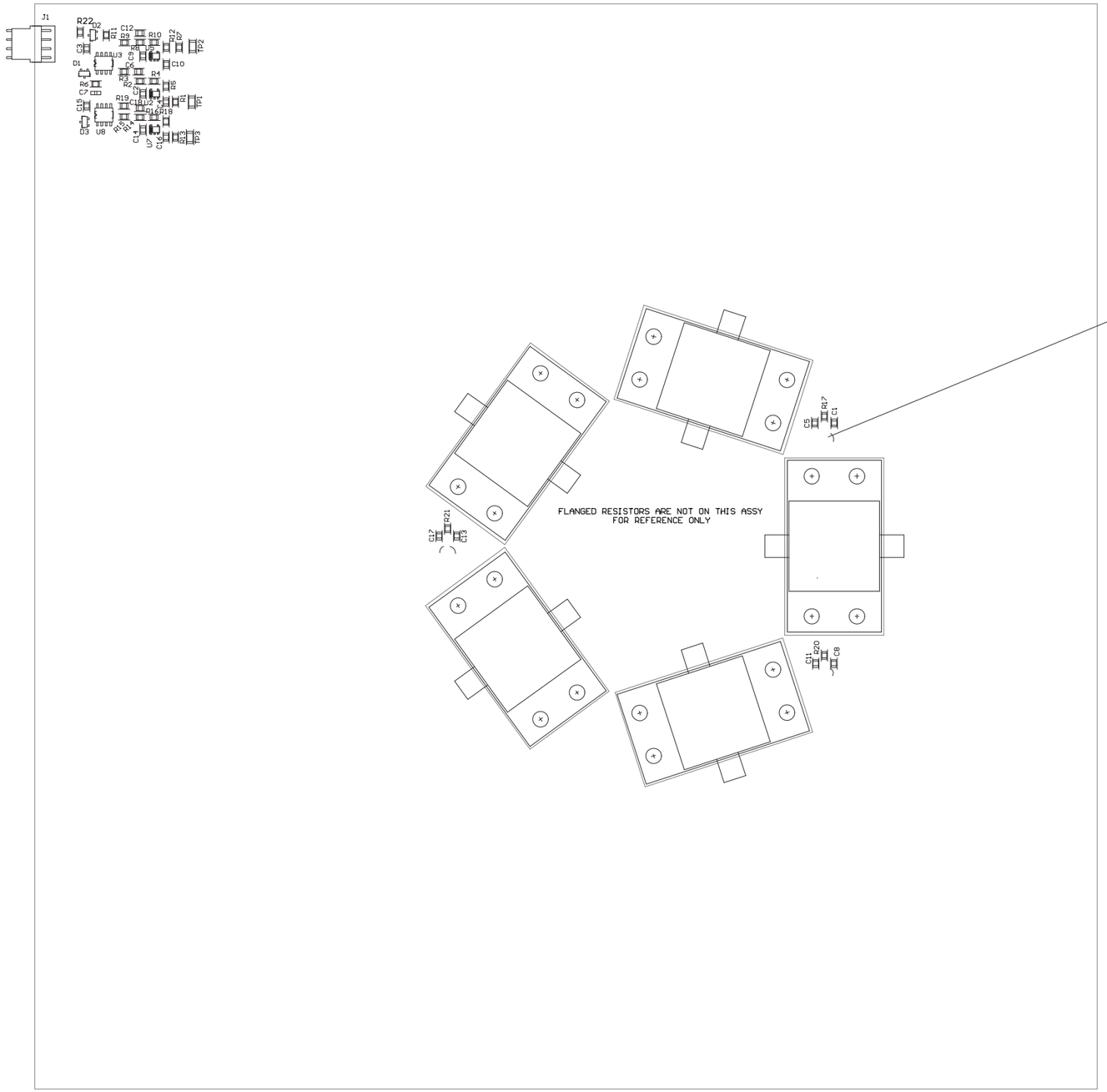

COMPONENT SIDE SILKSCREEN A/W 519-4025 REV B

DESIGNER J BRENNAN	MATERIAL .062 FR4
ENGINEER K MURPHY	FINISH HASL
PROPRIETARY RIGHTS are included in information disclosed herein. This information is submitted in confidence and neither this document nor the information disclosed herein shall be reproduced or transferred to other documents or used or disclosed to others for manufacturing or for any other purpose except as specifically authorized in writing by BROADCAST ELECTRONICS, INC.	TOLERANCE U.O.S. .x ± .030 .xx ± .015 .xxx ± .005 ANGLES ± 1

BROADCAST ELECTRONICS INC.
4100 N. 24TH ST., P.O.BOX 3606 QUINCY, IL. 62305
217/224-9600 FAX 217/224-9607

TITLE PCB COMBINER TEMP/SENSE BACKER

TYPE A | SIZE D | DWG. NO. 919-4025 | REV B

MODEL STX LP | SCALE 1:1 | SHEET 1 OF 1

REVISIONS				
REV	DATE	DESCRIPTION	DRAFTER	ECN
A	6-2-09	RELEASE TO PRODUCTION	JTB	
B	11-6-09	ADD R22, CH C5,C11,C17	JTB	11725

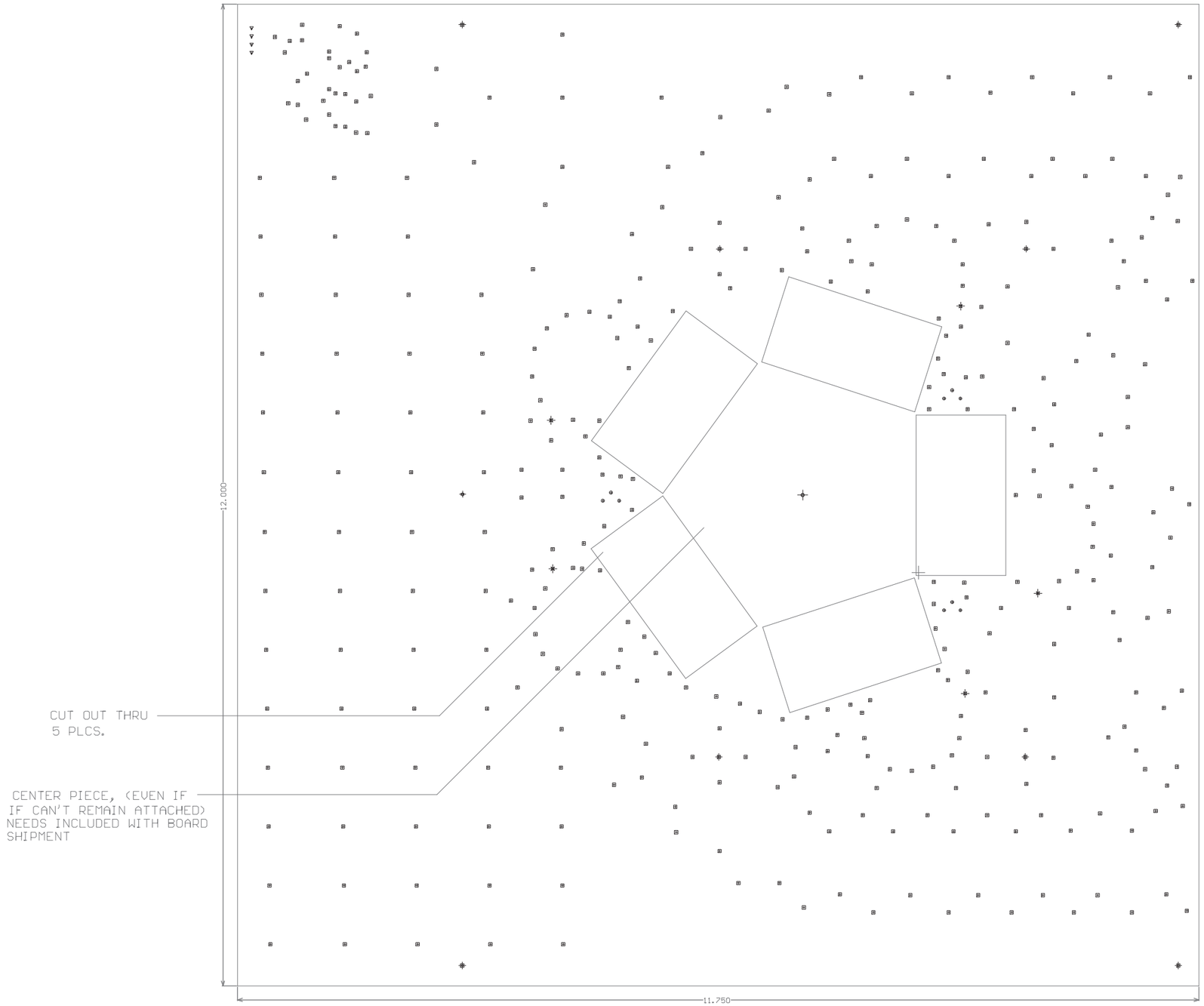

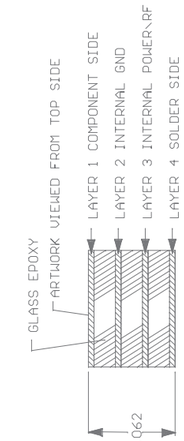

NOTES:

1. MATERIAL: 0.062 IN. FIBERGLASS REINFORCED EPOXY. NEMO GRADE FR4. NATURAL COLOR WITHOUT OPAQUE 2 OZ. COPPER CLAD OUTER LAYERS
2. HASL
3. SOLDERMASK ON TOP SIDE ONLY
4. SILKSCREEN BOTH SIDES
5. CIRCUIT BOARD TO BE ELECTRICALLY TESTED BY VENDOR FOR TRACE CONTINUITY AND PROOF AGAINST TRACE SHORTS.
6. ALL RADIUS .047 UNLESS OTHERWISE NOTED....

Symbol	Hit Count	Tool Size	Plated	Hole Type
□	353	30mil (0.762mm)	PTH	Round
▽	4	33mil (0.8382mm)	PTH	Round
○	9	50mil (1.27mm)	PTH	Round
✱	1	156mil (3.9624mm)	PTH	Round
⊠	8	169mil (4.2926mm)	PTH	Round
⌘	5	201mil (5.1054mm)	PTH	Round
◇	1	250mil (6.35mm)	NPTH	Round
	381 Total			

DESIGNER: J BRENNAN
ENGINEER: K MURPHY
MATERIAL: .062 FR4
FINISH: HASL

PROPRIETARY RIGHTS are included in information disclosed herein. This information is submitted in confidence and neither this document nor the information disclosed herein shall be reproduced or transferred to other documents or used or disclosed to others for manufacturing or for any other purpose except as specifically authorized in writing by BROADCAST ELECTRONICS, INC.

TOLERANCE U.O.S.
.x ± .030
.xx ± .015
.xxx ± .005
ANGLES ± 1

BROADCAST ELECTRONICS INC.
4100 N. 24TH ST., P.O.BOX 3606 QUINCY, IL. 62305
217/224-9600 FAX 217/224-9607

TITLE: PCB COMBINER TEMP/SENSE BACKER
TYPE A SIZE D DWG. NO. 519-4025 REV B
MODEL STX LP SCALE 1:1 SHEET 1 OF 1

REVISIONS					
REV	DATE	DESCRIPTION	DFTSMN	ENGR	ECN
A	4-22-09	RELEASE TO PRODUCTION	JTB	DWK	------
B	6-10-10	ADD R299 (102-5143) SHT 4	JTB	DWK	11701

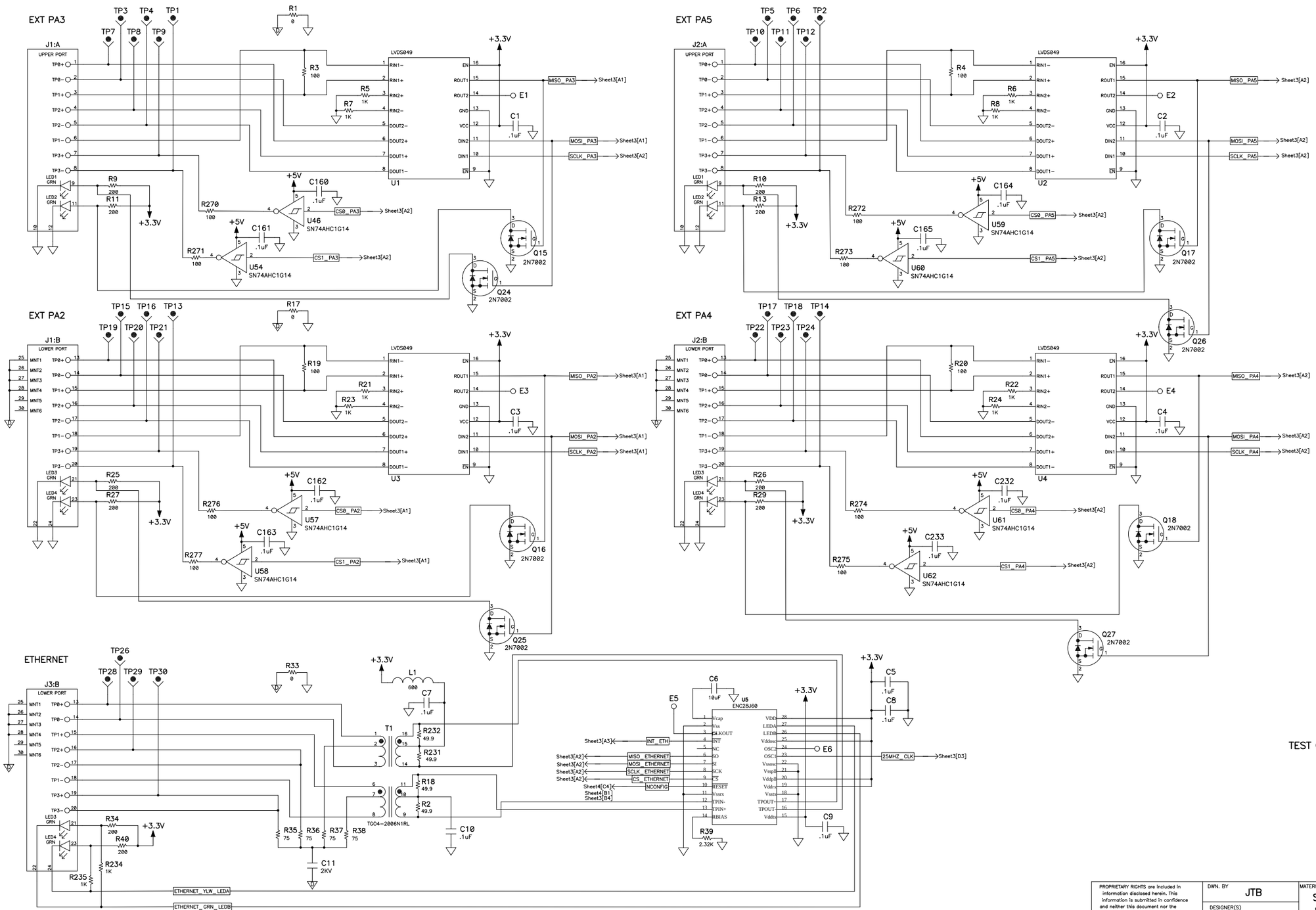

TEST GND STUD

Spare Gate Table		
Last Used	Not Used	Spare Gates
C235		
D10		
DS12		
E40	E7, E8, E11, E12, E14, E25, E33	
F2	F1	
J19		
L8		
MH5		
P7		
Q29	Q6	
R299	R12, R14, R15, R16, R197, R224, R225, R226, R227, R228	
SW1		
T1		
TP41	TP36	
U64	U9	
Y1		

COPYRIGHT © 2006 BROADCAST ELECTRONICS, INC.

PROPRIETARY RIGHTS are included in information disclosed herein. This information is submitted in confidence and neither this document nor the information disclosed herein shall be reproduced or transferred to other documents or used or disclosed to others for manufacturing or for any other purpose except as specifically authorized in writing by BROADCAST ELECTRONICS, INC.

TOLERANCE (DECIMAL) U.O.S.
.x ± .030 .xxx ± .005
.xx ± .015 ANGLES ± 1

DWN. BY: JTB
DESIGNER(S): DWK
DATE: 2-22-08
MFG.

MATERIAL: SEE BOM 919-4030
FINISH
NEXT ASSY.

BROADCAST ELECTRONICS INC.
4100 N. 24TH ST., P.O.BOX 3606 QUINCY, IL. 62305
217/224-9600 FAX 217/224-9607

TITLE: SCHEMATIC, STXLP CONTROLLER

TYPE	SIZE	DWG. NO.	REV
S	D	919-4030	B

MODEL: STX LP SCALE: NONE SHEET 1 OF 6

REVISIONS					
REV	DATE	DESCRIPTION	DFTSMN	ENGR	ECN
A	4-22-09	RELEASE TO PRODUCTION	JTB	DWK	------
B	6-10-10	ADD R299 (102-5143) SHT 4	JTB	DWK	11761

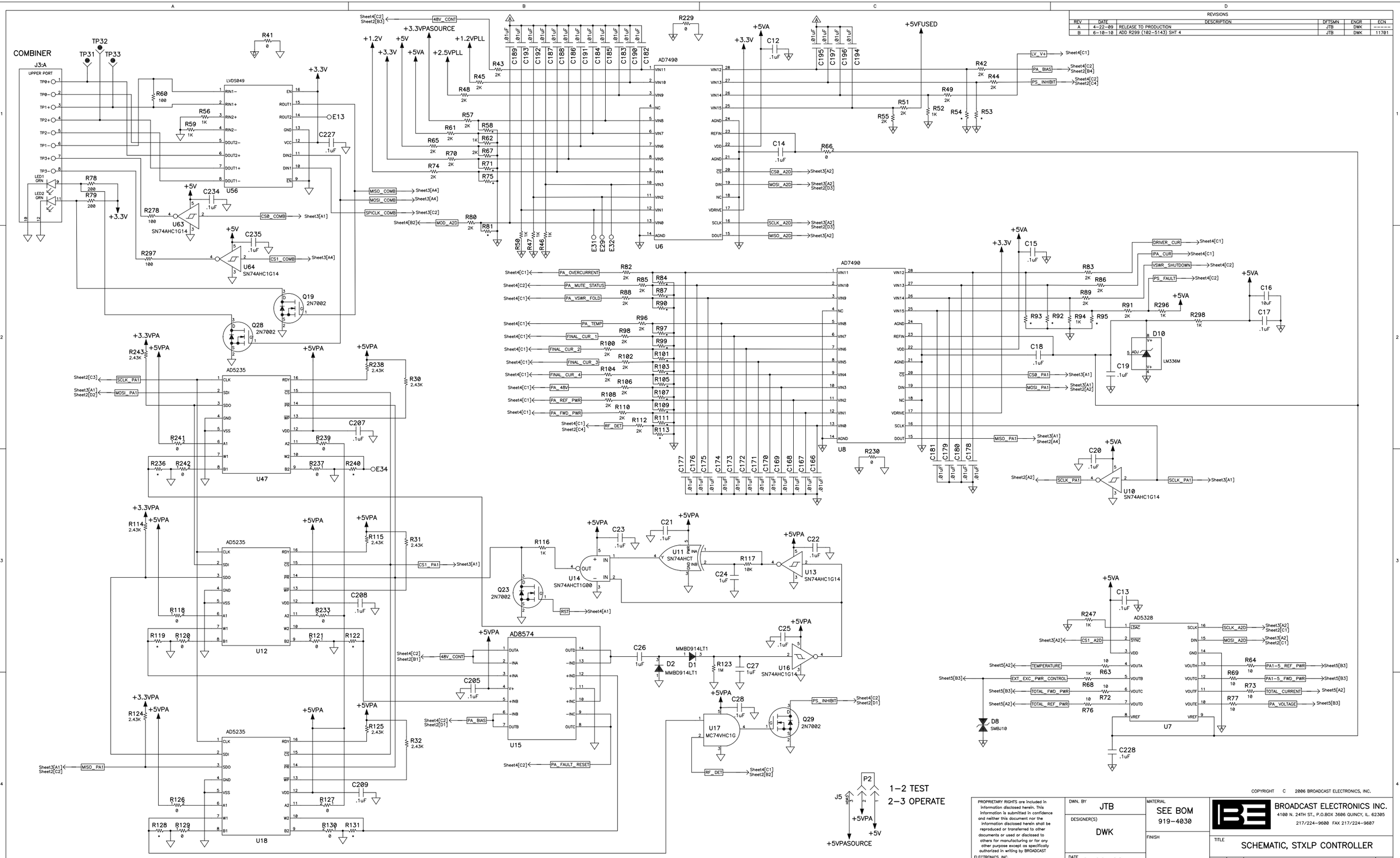

PROPRIETARY RIGHTS are included in information disclosed herein. This information is submitted in confidence and neither this document nor the information disclosed herein shall be reproduced or transferred to other documents or used or disclosed to others for manufacturing or for any other purpose except as specifically authorized in writing by BROADCAST ELECTRONICS, INC.

TOLERANCE (DECIMAL) U.O.S.
.x + .030 .xxx + .005
.xx + .015 ANGLES + 1

DWN. BY	JTB	MATERIAL	SEE BOM 919-4030
DESIGNER(S)	DWK	FINISH	
DATE	2-22-08	NEXT ASSY.	
MFG.			

COPYRIGHT © 2006 BROADCAST ELECTRONICS, INC.

BROADCAST ELECTRONICS INC.
4100 N. 24TH ST., P.O.BOX 3606 QUINCY, IL 62305
217/224-9600 FAX 217/224-9607

TITLE: SCHEMATIC, STXLP CONTROLLER

TYPE	SIZE	DWG. NO.	REV
S	D	919-4030	B

MODEL STX LP SCALE NONE SHEET 2 OF 6

REVISIONS					
REV	DATE	DESCRIPTION	DFTSMN	ENGR	ECN
A	4-22-09	RELEASE TO PRODUCTION	JTB	DWK	------
B	6-10-10	ADD R299 (102-5143) SHT 4	JTB	DWK	11761

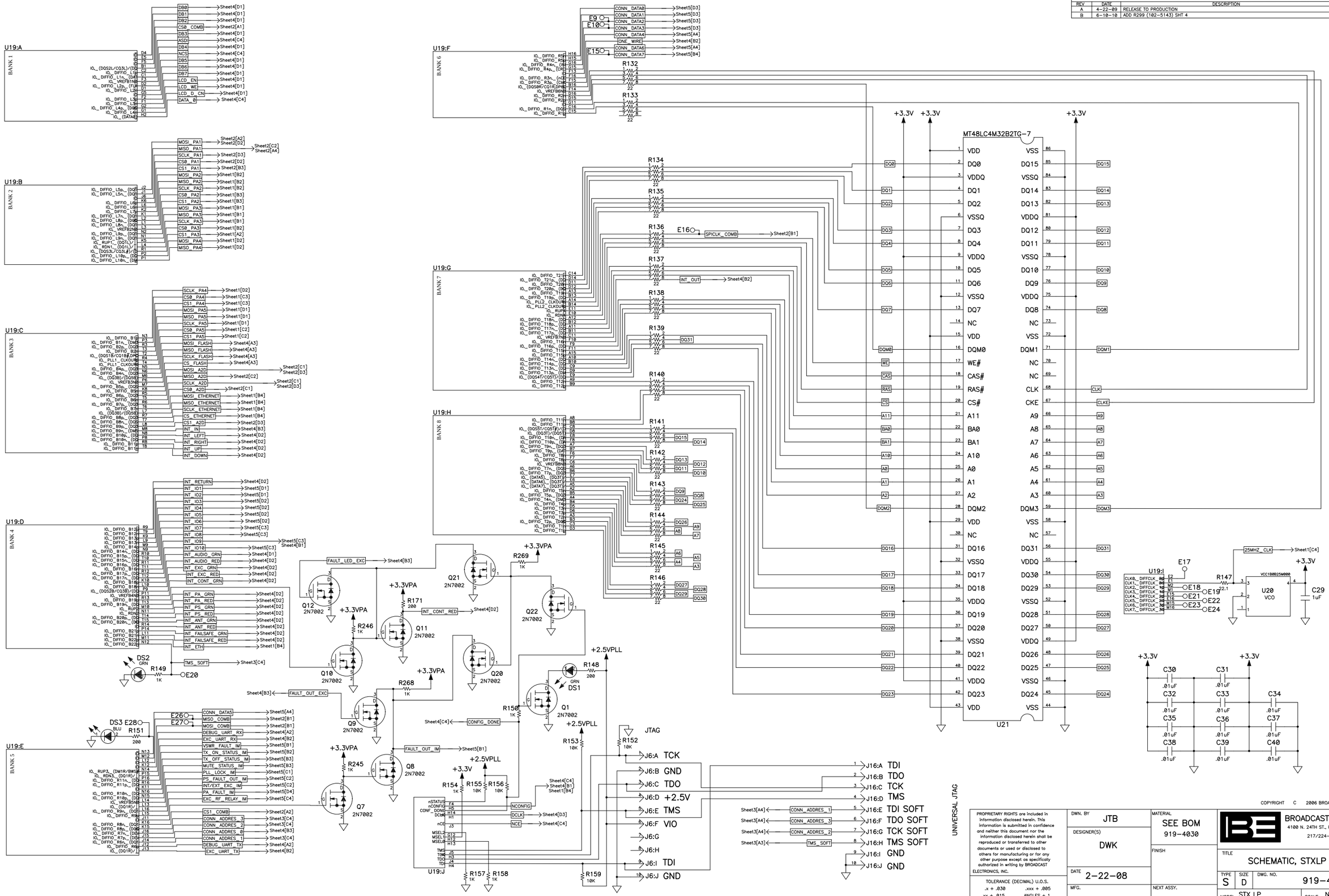

PROPRIETARY RIGHTS are included in information disclosed herein. This information is submitted in confidence and neither this document nor the information disclosed herein shall be reproduced or transferred to other documents or used or disclosed to others for manufacturing or for any other purpose except as specifically authorized in writing by BROADCAST ELECTRONICS, INC.

TOLERANCE (DECIMAL) U.O.S.
.x + .030 .xxx + .005
.xx + .015 ANGLES + 1

DWN. BY JTB
DESIGNER(S) DWK
DATE 2-22-08
MFG.

MATERIAL SEE BOM 919-4030
FINISH
NEXT ASSY.

COPYRIGHT © 2006 BROADCAST ELECTRONICS, INC.

BROADCAST ELECTRONICS INC.
4100 N. 24TH ST., P.O.BOX 3606 QUINCY, IL. 62305
217/224-9600 FAX 217/224-9607

TITLE SCHEMATIC, STXLP CONTROLLER

TYPE	SIZE	DWG. NO.	REV
S	D	919-4030	B

MODEL STX LP SCALE NONE SHEET 3 OF 6

REVISIONS					
REV	DATE	DESCRIPTION	DFTSMN	ENGR	ECN
A	4-22-09	RELEASE TO PRODUCTION	JTB	DWK	------
B	6-10-10	ADD R299 (102-5143) SHT 4	JTB	DWK	11781

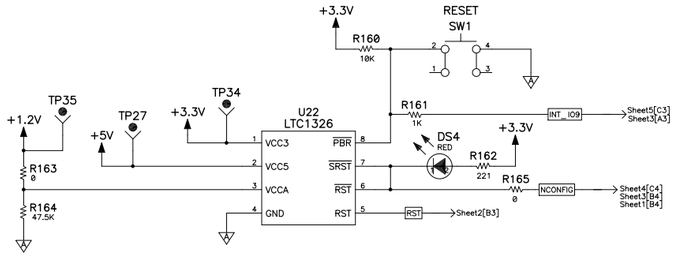

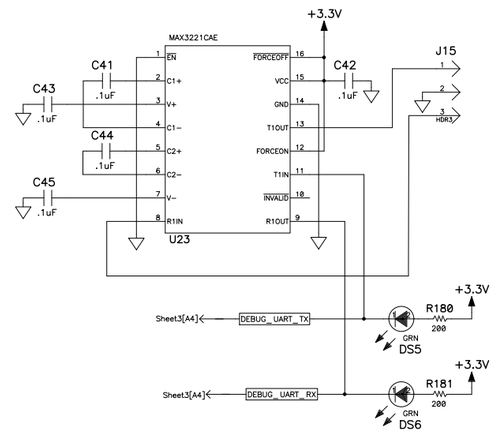

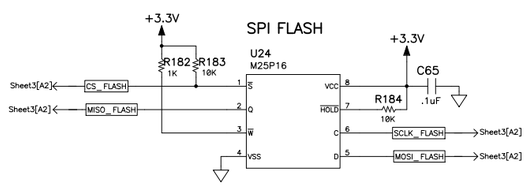

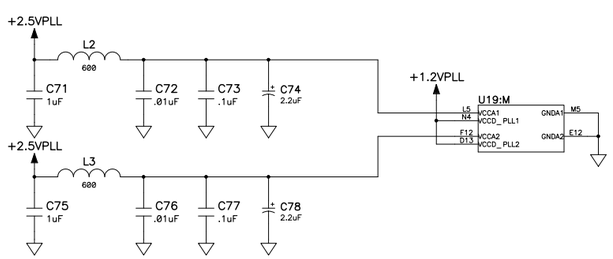

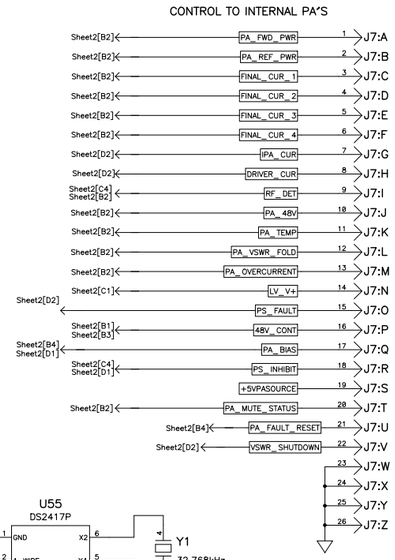

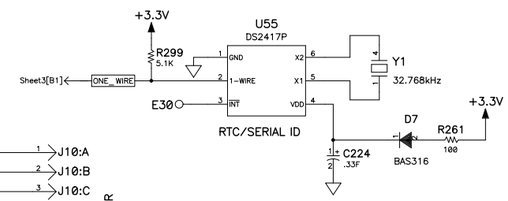

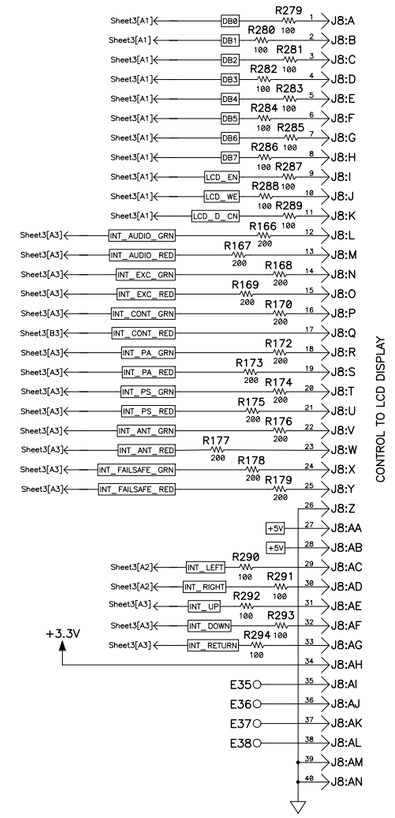

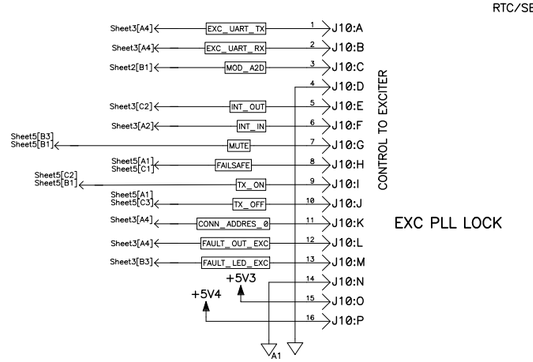

EXC PLL LOCK

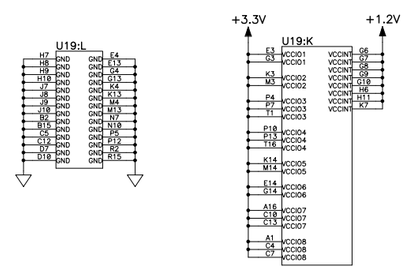

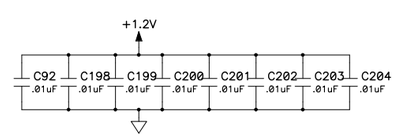

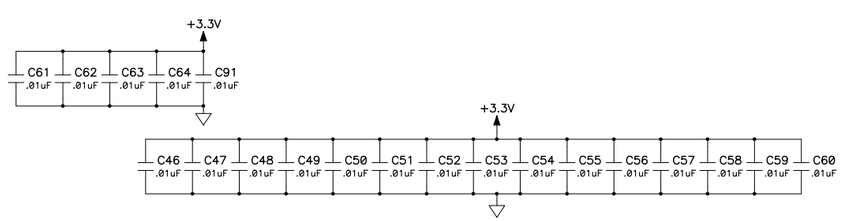

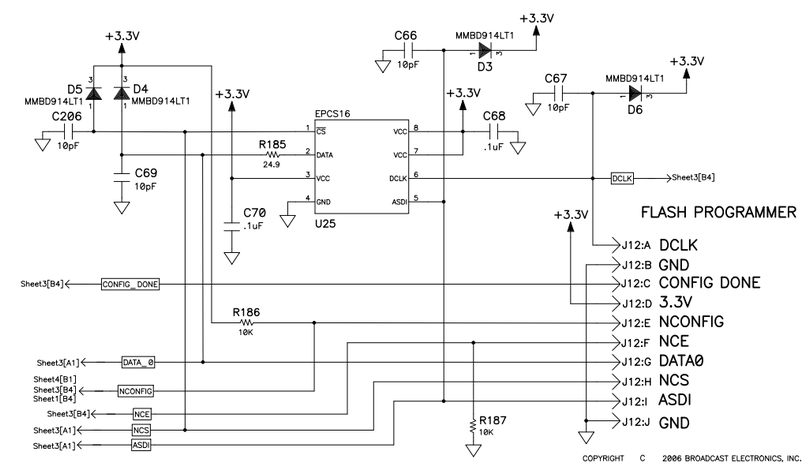

COPYRIGHT © 2006 BROADCAST ELECTRONICS, INC.

PROPRIETARY RIGHTS are included in information disclosed herein. This information is submitted in confidence and neither this document nor the information disclosed herein shall be reproduced or transferred to other documents or used or disclosed to others for manufacturing or for any other purpose except as specifically authorized in writing by BROADCAST ELECTRONICS, INC.

TOLERANCE (DECIMAL) U.O.S.
.x + .030 .xxx + .005
.xx + .015 ANGLES + 1

DWN. BY JTB
DESIGNER(S) DWK
DATE 2-22-08
MFG.

MATERIAL SEE BOM 919-4030
FINISH
NEXT ASSY.

BROADCAST ELECTRONICS INC.
4100 N. 24TH ST., P.O.BOX 3606 QUINCY, IL. 62305
217/224-9600 FAX 217/224-9607

TITLE SCHEMATIC, STXLP CONTROLLER

TYPE	SIZE	DWG. NO.	REV
S	D	919-4030	B

MODEL STX LP SCALE NONE SHEET 4 OF 6

REVISIONS					
REV	DATE	DESCRIPTION	DFTSMN	ENGR	ECN
A	4-22-09	RELEASE TO PRODUCTION	JTB	DWK	-----
B	6-10-10	ADD R299 (102-5143) SHT 4	JTB	DWK	11781

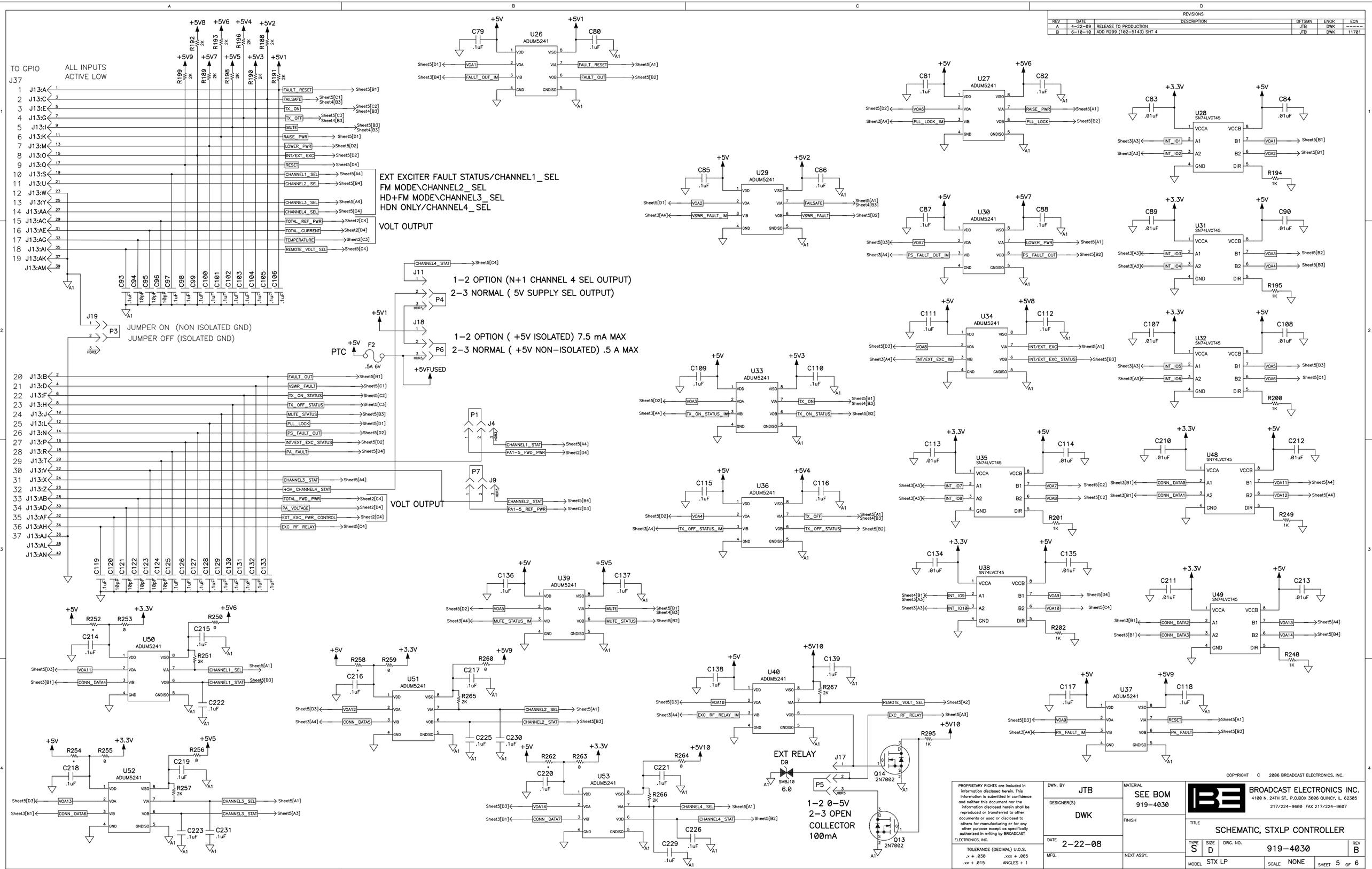

COPYRIGHT C 2006 BROADCAST ELECTRONICS, INC.

PROPRIETARY RIGHTS are included in information disclosed herein. This information is submitted in confidence and neither this document nor the information disclosed herein shall be reproduced or transferred to other documents or used or disclosed to others for manufacturing or for any other purpose except as specifically authorized in writing by BROADCAST ELECTRONICS, INC.

TOLERANCE (DECIMAL) U.O.S.
.x + .030 .xxx + .005
.xx + .015 ANGLES + 1

DWN. BY: JTB
DESIGNER(S): DWK
DATE: 2-22-08
MFG.

MATERIAL: SEE BOM 919-4030
FINISH
NEXT ASSY.

BROADCAST ELECTRONICS INC.
4100 N. 24TH ST., P.O.BOX 3606 QUINCY, IL. 62305
217/224-9600 FAX 217/224-9607

TITLE: SCHEMATIC, STXLP CONTROLLER

TYPE	SIZE	DWG. NO.	REV
S	D	919-4030	B

MODEL: STX LP
SCALE: NONE
SHEET 5 OF 6

REVISIONS					
REV	DATE	DESCRIPTION	DFTSMN	ENGR	ECN
A	4-22-09	RELEASE TO PRODUCTION	JTB	DWK	------
B	6-10-10	ADD R299 (102-5143) SHT 4	JTB	DWK	11781

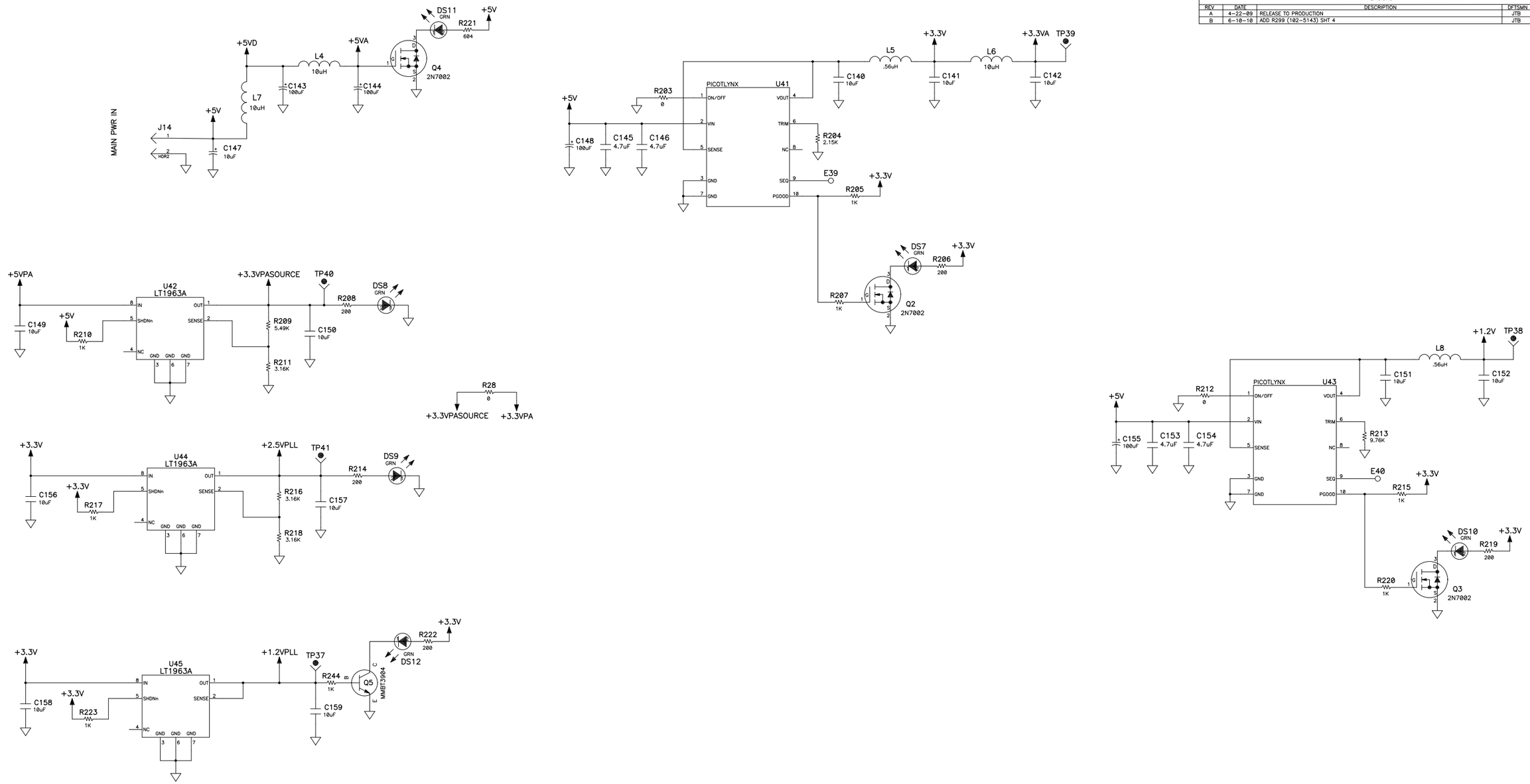

COPYRIGHT © 2006 BROADCAST ELECTRONICS, INC.

PROPRIETARY RIGHTS are included in information disclosed herein. This information is submitted in confidence and neither this document nor the information disclosed herein shall be reproduced or transferred to other documents or used or disclosed to others for manufacturing or for any other purpose except as specifically authorized in writing by BROADCAST ELECTRONICS, INC.

TOLERANCE (DECIMAL) U.O.S.
.x ± .030 .xxx ± .005
.xx ± .015 ANGLES ± 1

DWN. BY JTB
DESIGNER(S) DWK
DATE 2-22-08
MFG.

MATERIAL SEE BOM 919-4030
FINISH
NEXT ASSY.

BROADCAST ELECTRONICS INC.
4100 N. 24TH ST., P.O.BOX 3606 QUINCY, IL. 62305
217/224-9600 FAX 217/224-9607

TITLE SCHEMATIC, STXLP CONTROLLER

TYPE	SIZE	DWG. NO.	REV
S	D	919-4030	B

MODEL STX LP SCALE NONE SHEET 6 OF 6

REVISIONS					
REV	DATE	DESCRIPTION	DRAFTER	APPROVED	ECN
A	2-22-09	RELEASE TO PRODUCTION	JTB	DWK	----
B	6-10-10	ADD R299 102-5143	JTB	DWK	11701

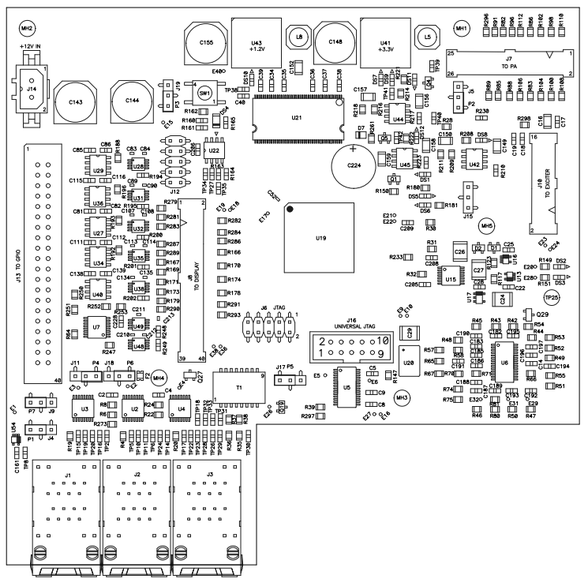

TOP ASSY

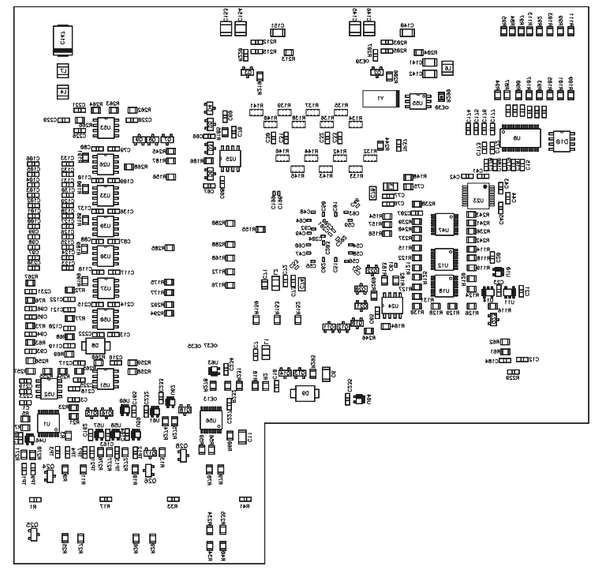

BTM ASSY

COPYRIGHT © 2009 BROADCAST ELECTRONICS, INC.

PROPRIETARY RIGHTS are included in information disclosed herein. This information is submitted in confidence and neither this document nor the information disclosed herein shall be reproduced or transferred to other documents or used or disclosed to others for manufacturing or for any other purpose except as specifically authorized in writing by BROADCAST ELECTRONICS, INC.

TOLERANCE (DECIMAL) U.O.S.
.X + .030 .XXX + .005
.XX + .015 ANGLES + 1

DWN. BY JTB 9-2-08
DESIGNER(S) DWK 9-2-08
PROJ. LEADER
MFG.
MATERIAL
FINISH
NEXT ASSY.

BROADCAST ELECTRONICS INC.
4100 N. 24TH ST. P.O.BOX 3606 QUINCY,IL. 62305
217/224-9600 FAX 217/224-9607

TITLE STX LP CONTROL BOARD

TYPE	SIZE	DWG No.	REV
A	C	919-4030	B

MODEL STX LP SCALE 1/1 SHEET 1 OF 1

REVISION HISTORY				
REV	DATE	DESCRIPTION	DRAWN	ECN
A	07-31-09	RELEASE TO PRODUTION	JTB	———
B	01-28-10	DISCONNECT D3 PIN 5	JTB	11750
C	02-03-11	CHANGE PART# FOR TP5, CHANGE HOLES FOR J2 TO NON-PLATED	DLR	11837

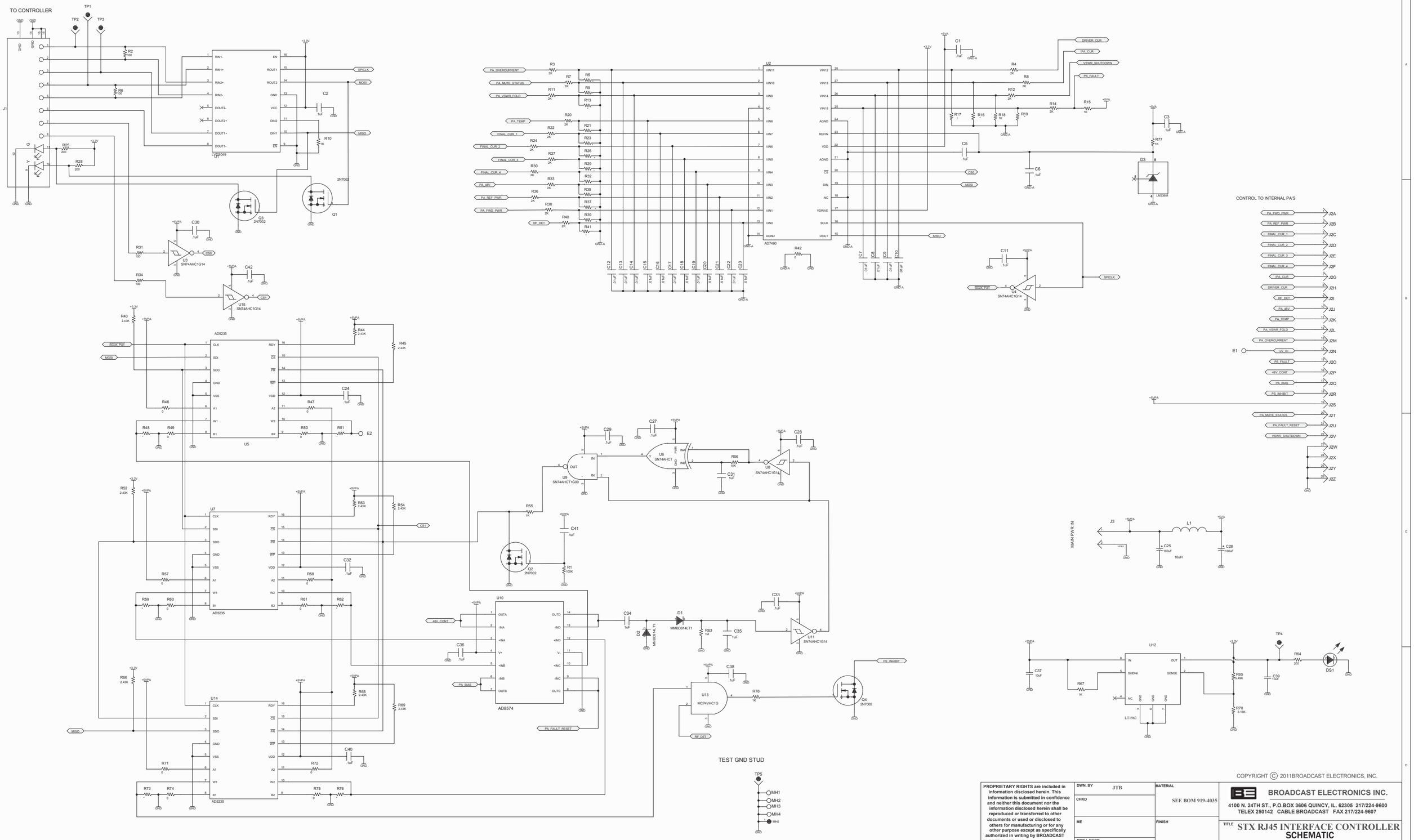

COPYRIGHT © 2011BROADCAST ELECTRONICS, INC.

PROPRIETARY RIGHTS are included in information disclosed herein. This information is submitted in confidence and neither this document nor the information disclosed herein shall be reproduced or transferred to other documents or used or disclosed to others for manufacturing or for any other purpose except as specifically authorized in writing by BROADCAST ELECTRONICS, INC.

TOLERANCE (DECIMAL) U.O.S.
.x ± .030 .xxx ± .005
.xx ± .015 ANGLES ± 1

DWN. BY JTB
CHKD
ME
PROJ. ENGR.
MFG.

MATERIAL SEE BOM 919-4035
FINISH
NEXT ASSY.

BROADCAST ELECTRONICS INC.
4100 N. 24TH ST., P.O.BOX 3606 QUINCY, IL. 62305 217/224-9600
TELEX 250142 CABLE BROADCAST FAX 217/224-9607

TITLE STX RJ45 INTERFACE CONTROLLER SCHEMATIC

TYPE	SIZE	DWG. NO.	REV
S	D	919-4035	C

MODEL STXLP SCALE NONE SHEET 1 OF 1

REVISION HISTORY				
REV	DATE	DESSCIPTION	DRAWN	ECN
A	8-18-09	RELEASE TO PRODUCTION	JTB	——
B	1-28-10	REM TRACE FROM D3 PIN 5	JTB	11750
C	02-03-11	CHANGED J2 HOLE TO NON-PLATED	DLR	11837

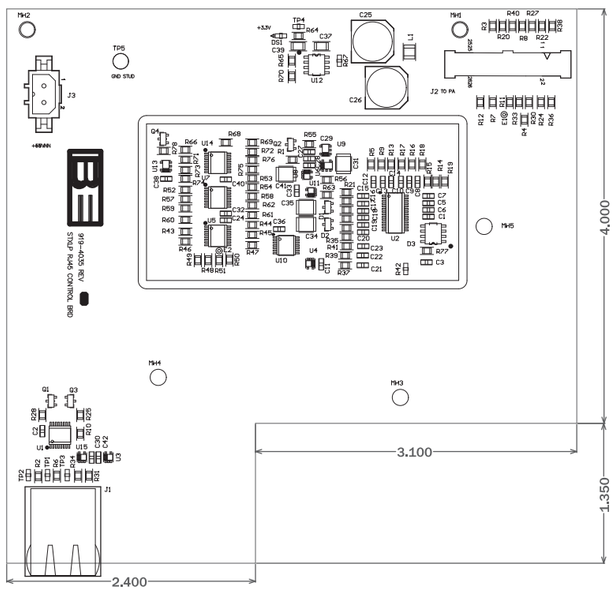

COMPONENT SIDE SILK SCREEN 519-4035 REV C
TOP ASSY

COPYRIGHT © 2011BROADCAST ELECTRONICS, INC.

PROPRIETARY RIGHTS are included in information disclosed herein. This information is submitted in confidence and neither this document nor the information disclosed herein shall be reproduced or transferred to other documents or used or disclosed to others for manufacturing or for any other purpose except as specifically authorized in writing by BROADCAST ELECTRONICS, INC.

TOLERANCE (DECIMAL) U.O.S.
.X + .030 .XXX + .005
.XX + .015 ANGLES + 1°

DWN. BY/DATE: JTB 3-5-09
DESIGNER(S)/DATE: KM 5-18-09
PROJ. LEADER/DATE
ME/DATE
MFG./DATE
MATERIAL
FINISH
NEXT ASSY.

BROADCAST ELECTRONICS INC.
4100 N. 24TH ST. P.O.BOX 3606 QUINCY,IL. 62305
217/224-9600 FAX 217/224-9607

TITLE: STX LP RJ45 CONTROLLER ASSEMBLY DRAWWING

TYPE	SIZE	DWG No.	REV
A	B	919-4035	C

MODEL	SCALE	SHEET	OF
STX LP	1/1	1	1

REVISIONS				
REV	DATE	DESCRIPTION	DRAFTER	ECN
A	5-1-09	RELEASE TO PRODUCTION	JTB	

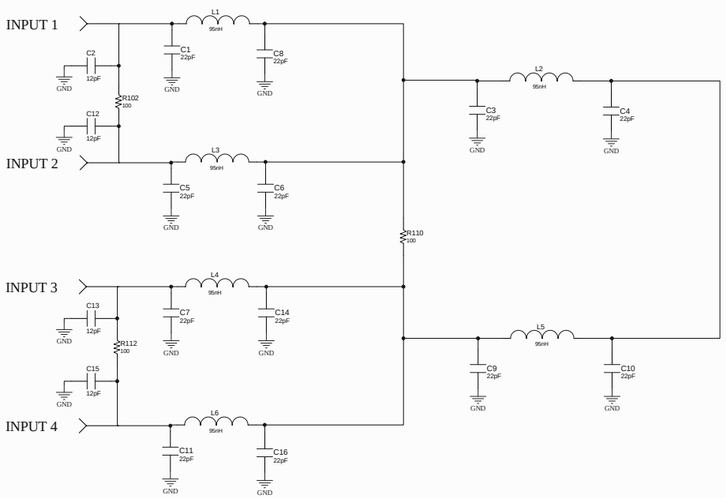

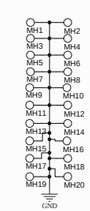

DESIGNER J BRENNAN	MATERIAL	BROADCAST ELECTRONICS INC. 4100 N. 24TH ST., P.O.BOX 3606 QUINCY, IL 62305 217/224-9600 FAX 217/224-9607	
ENGINEER T HEA	FINISH		
PROPRIETARY RIGHTS are included in information disclosed herein. This information is submitted in confidence and neither this document nor the information disclosed herein shall be reproduced or transferred to other documents or used or disclosed to others for manufacturing or for any other purpose except as specifically authorized in writing by BROADCAST ELECTRONICS, INC.	TOLERANCE U.O.S. .x = .030 .xx = .015 .xxx = .005 ANGLES = 1	TITLE SCHEMATIC, STX LP,COMBINER	
		TYPE S SIZE D DWG. NO. 919-4040	REV A
		MODEL STX LP SCALE	SHEET 1 OF 1

REVISIONS				
REV	DATE	DESCRIPTION	DRAFTER	ECN
A	5-1-09	RELEASE TO PRODUCTION	JTB	

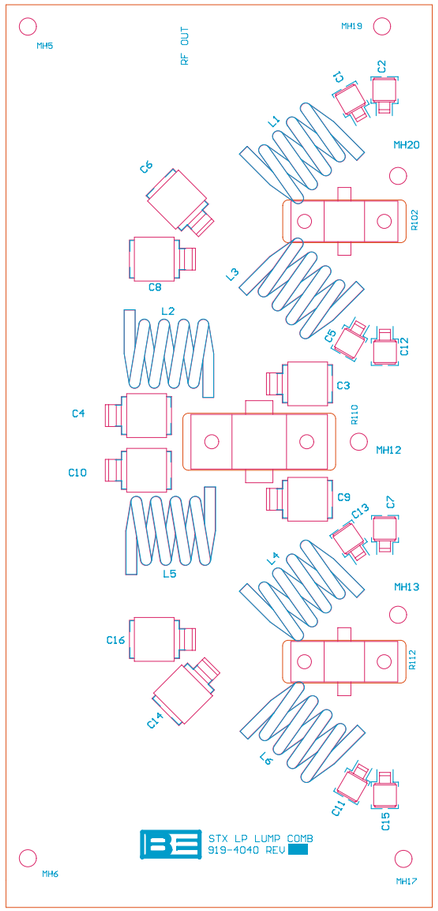

COMPONENT SIDE SILKSCREEN A/W 919-4040 REV A

DESIGNER J BRENNAN	MATERIAL	BROADCAST ELECTRONICS INC. 4100 N. 24TH ST., P.O.BOX 3606 QUINCY, IL. 62305 217/224-9600 FAX 217/224-9607
ENGINEER TED HEA	FINISH	
PROPRIETARY RIGHTS are included in information disclosed herein. This information is submitted in confidence and neither this document nor the information disclosed herein shall be reproduced or transferred to other documents or used or disclosed to others for manufacturing or for any other purpose except as specifically authorized in writing by BROADCAST ELECTRONICS, INC.	TOLERANCE U.O.S. .X ± .030 .XX ± .015 .XXX ± .005 ANGLES ± 1	TITLE PCB ASSY LUMP ELEMENT COMB
		TYPE A SIZE D DWG. NO. 919-4040 REV A
		MODEL STX LP SCALE 1:1 SHEET 1 OF 1

REVISIONS

REV	DATE	DESCRIPTION	DRAFTER	ECN
1	11-20-09	PRELIMINARY RELEASE	JTB	
A	2-26-10	RELEASE TO PRODUCTION	JTB	

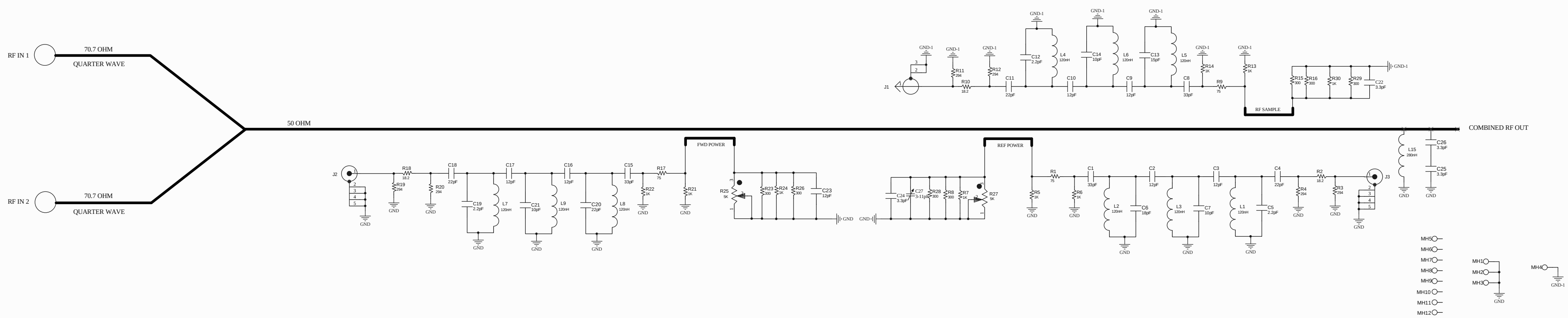

DESIGNER J BRENNAN	MATERIAL	BROADCAST ELECTRONICS INC. 4100 N. 24TH ST., P.O.BOX 3606 QUINCY, IL. 62305 217/224-9600 FAX 217/224-9607	
ENGINEER K MURPHY	FINISH		
PROPRIETARY RIGHTS are included in information disclosed herein. This information is submitted in confidence and neither this document nor the information disclosed herein shall be reproduced or transferred to other documents or used or disclosed to others for manufacturing or for any other purpose except as specifically authorized in writing by BROADCAST ELECTRONICS, INC.	TOLERANCE U.O.S. .x + .030 .xx + .015 .xxx + .005 ANGLES + 1	TITLE SCHEMATIC, STX LP 2 WAY COMB	
		TYPE S SIZE D DWG. NO. 919-4045	REV A
		MODEL STX LP SCALE 1:1	SHEET 1 OF 1

REVISIONS				
REV	DATE	DESCRIPTION	DRAFTER	ECN
1	11-20-09	PRELIMINARY RELEASE	JTB	
A	2-26-10	RELEASE TO PRODUCTION	JTB	

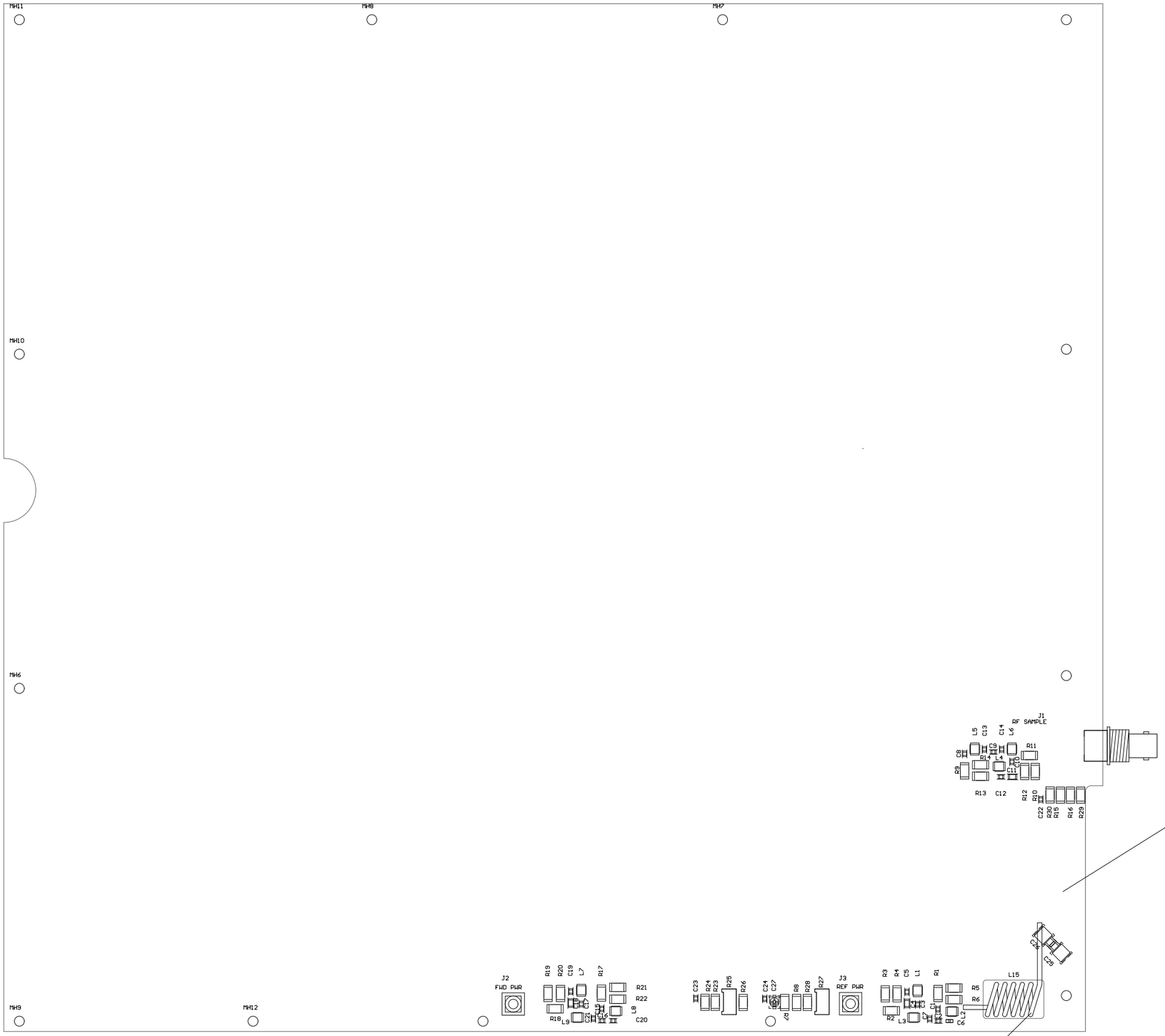

INSTALL PEM NO. KFS2-.032,
2 PLCS. ON OPP. SIDE
426-0000

L15 INSTALLED WITH LEADS ON BTM OF PCB

COMPONENT SIDE SILKSCREEN A-W 919-4045 REV A

DESIGNER: J BRENNAN	MATERIAL: .062 FR4	BROADCAST ELECTRONICS INC. 4100 N. 24TH ST., P.O.BOX 3606 QUINCY, IL. 62305 217/224-9600 FAX 217/224-9607
ENGINEER: K MURPHY	FINISH: HASL	
PROPRIETARY RIGHTS are included in information disclosed herein. This information is submitted in confidence and the proprietary rights in the information disclosed herein shall be reproduced or transferred to other documents or used or disclosed to others for manufacturing or for any other purpose except as specifically authorized in writing by BROADCAST ELECTRONICS, INC.	TOLERANCE U.O.S. .x ± .030 .xx ± .015 .xxx ± .005 ANGLES ± 1	TITLE: PCB ASSY 2 WAY COMBINER
		TYPE A SIZE D DWG. NO. 919-4045 REV A
		MODEL STX LP SCALE 1:1 SHEET 1 OF 1

REVISIONS				
REV	DATE	DESCRIPTION	DRAFTER	ECN
A	4-25-09	RELEASE TO PRODUCTION	JTB	
B	7-11-09	ADD TEST POINTS	JTB	11697
C	1-13-10	MADE L38 (350-202), MADE L39 (366-0022-001)	JTB	11700

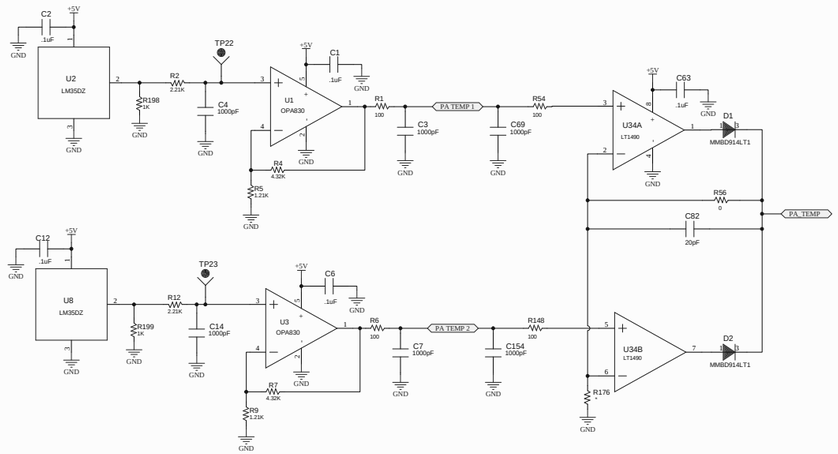

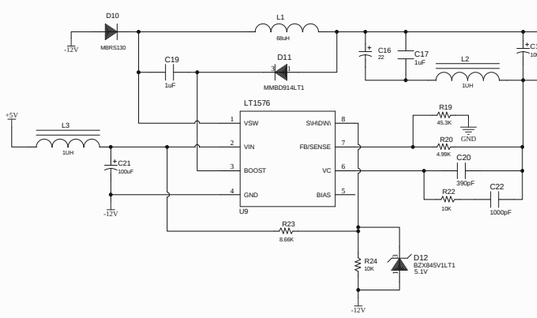

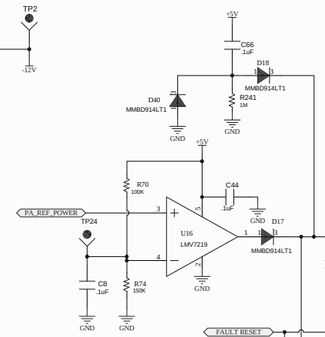

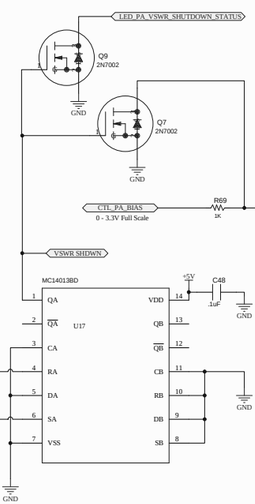

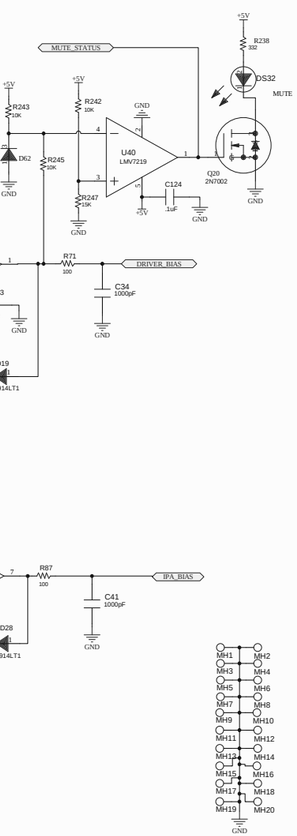

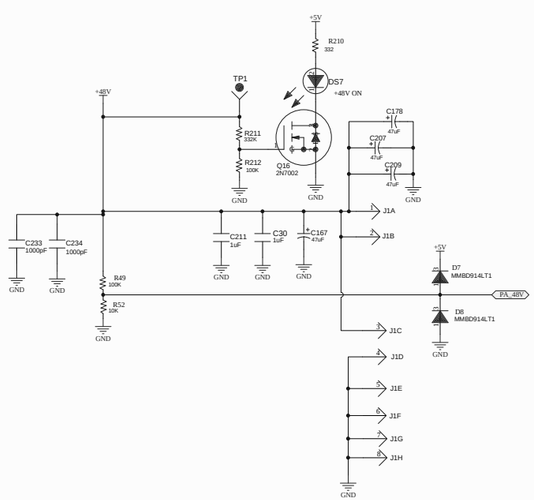

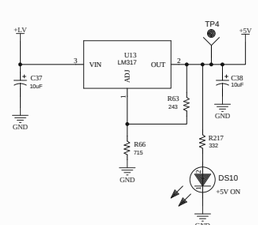

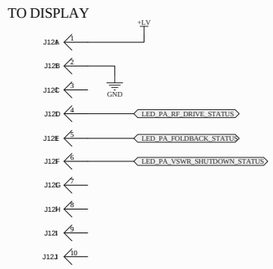

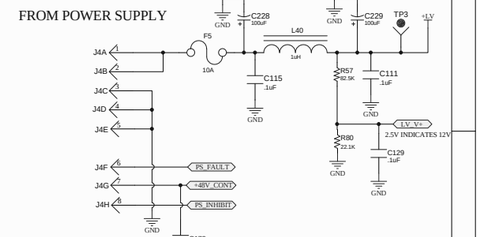

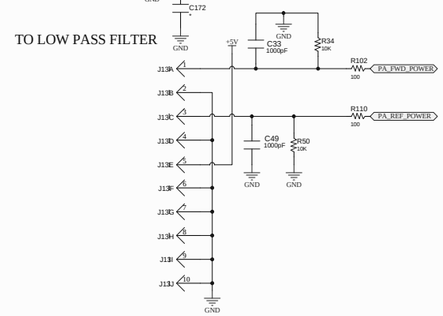

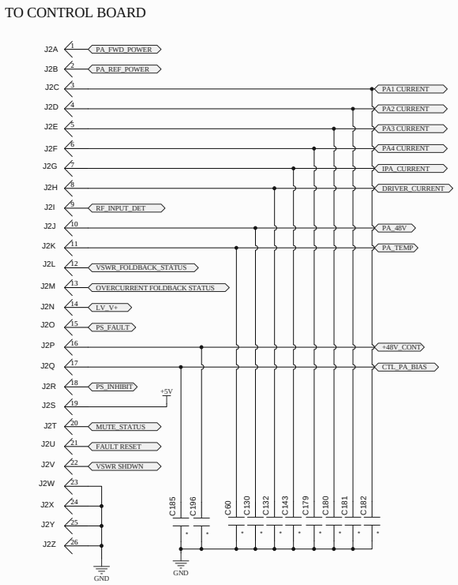

DESIGNER: J BRENNAN	MATERIAL	BROADCAST ELECTRONICS INC. 4100 N. 24TH ST., P.O.BOX 3606 QUINCY, IL 62305 217/224-9600 FAX 217/224-9607	
ENGINEER: T HEA	FINISH		
PROPRIETARY RIGHTS are included in information disclosed herein. This information is submitted in confidence and neither this document nor the information disclosed herein shall be reproduced or transferred to other documents or used or disclosed to others for manufacturing or for any other purpose except as specifically authorized in writing by BROADCAST ELECTRONICS, INC.	TOLERANCE U.O.S. .x ± .030 .xx ± .015 .xxx ± .005 ANGLES ± 1	TITLE: SCHEMATIC, STX LP,PA	
		TYPE S SIZE D DWG. NO. 919-4050	REV C
		MODEL STX LP SCALE	SHEET 1 OF 4

REVISIONS				
REV	DATE	DESCRIPTION	DRAFTER	ECN
A	4-25-09	RELEASE TO PRODUCTION	JTB	
B	7-11-09	ADD TEST POINTS	JTB	11697
C	1-13-10	MADE L38 (350-202), MADE L39 (366-0022-001)	JTB	11700

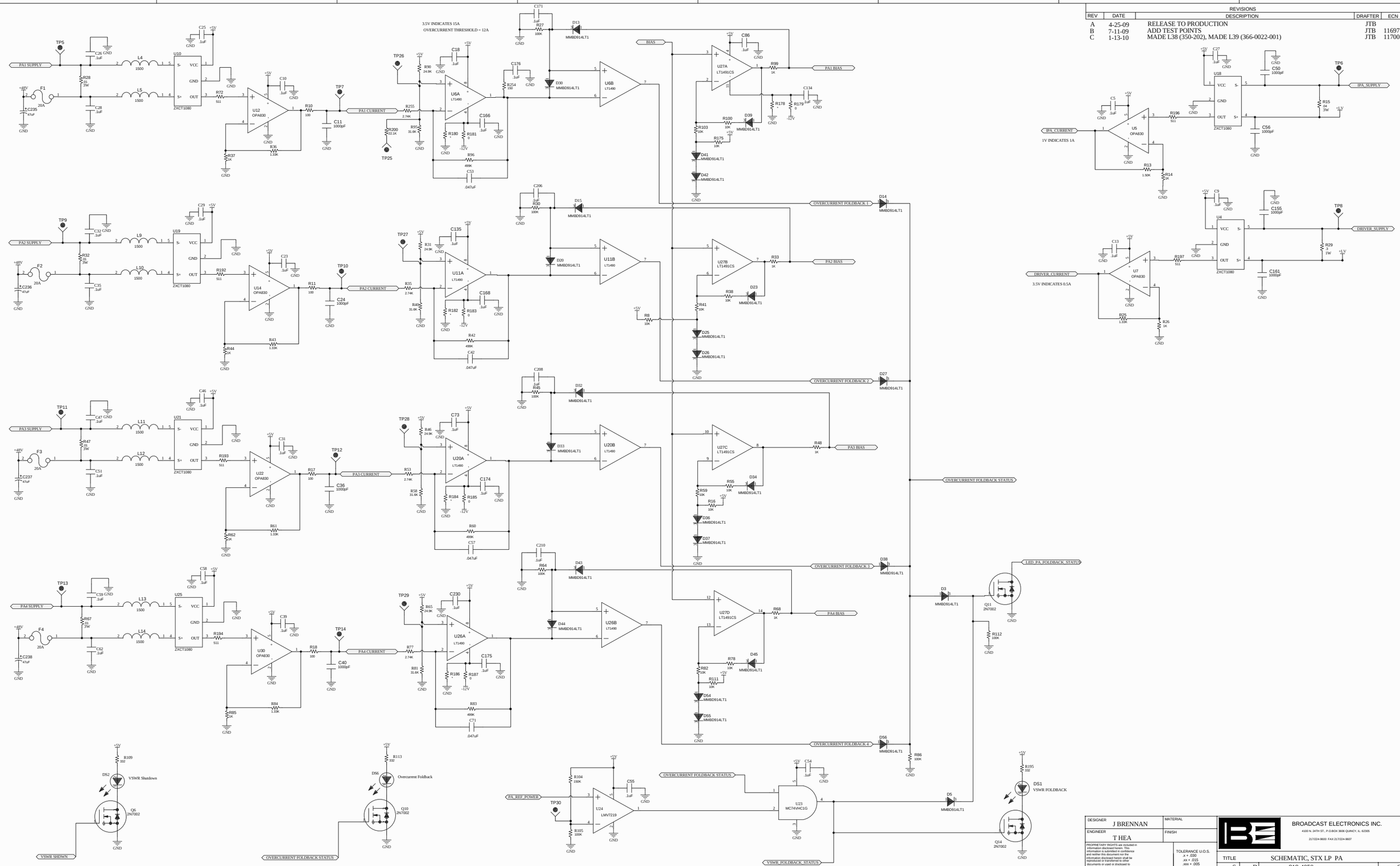

DESIGNER	J BRENNAN	MATERIAL	
ENGINEER	T HEA	FINISH	

PROPRIETARY RIGHTS are included in information disclosed herein. This document is proprietary property and neither this document nor the information disclosed herein shall be reproduced or transferred to other documents or used or disclosed to others for manufacture or for any other purpose except as specifically authorized in writing by BROADCAST ELECTRONICS, INC.

TOLERANCE U.O.S.
.x + .030
.xx + .015
.xxx + .005
ANGLES + 1

BROADCAST ELECTRONICS INC.
4100 N. 24TH ST., P.O.BOX 3606 QUINCY, IL. 62305
217/224-9600 FAX 217/224-9607

TITLE	SCHEMATIC, STX LP PA		
TYPE S	SIZE D	DWG. NO. 919-4050	REV C
MODEL STX LP		SCALE	SHEET 2 OF 4

REVISIONS				
REV	DATE	DESCRIPTION	DRAFTER	ECN
A	4-25-09	RELEASE TO PRODUCTION	JTB	
B	7-11-09	ADD TEST POINTS	JTB	11697
C	1-13-10	MADE L38 (350-202), MADE L39 (366-0022-001)	JTB	11700

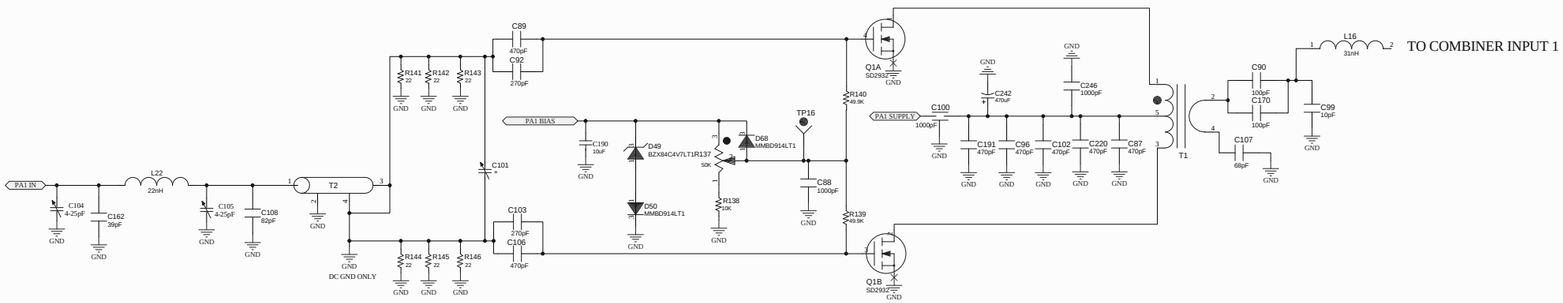

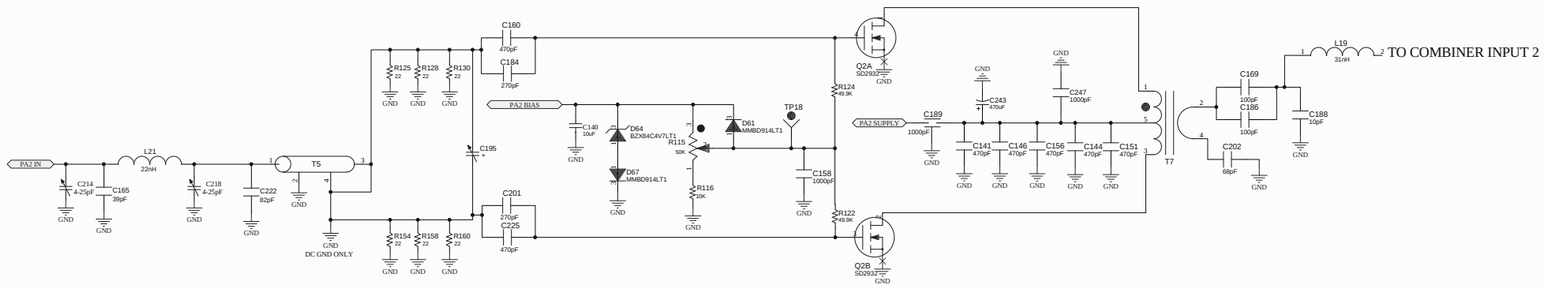

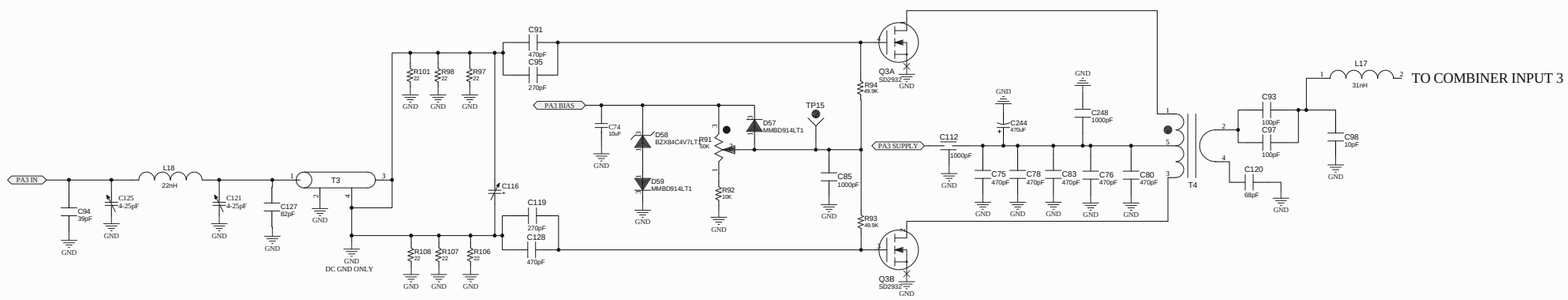

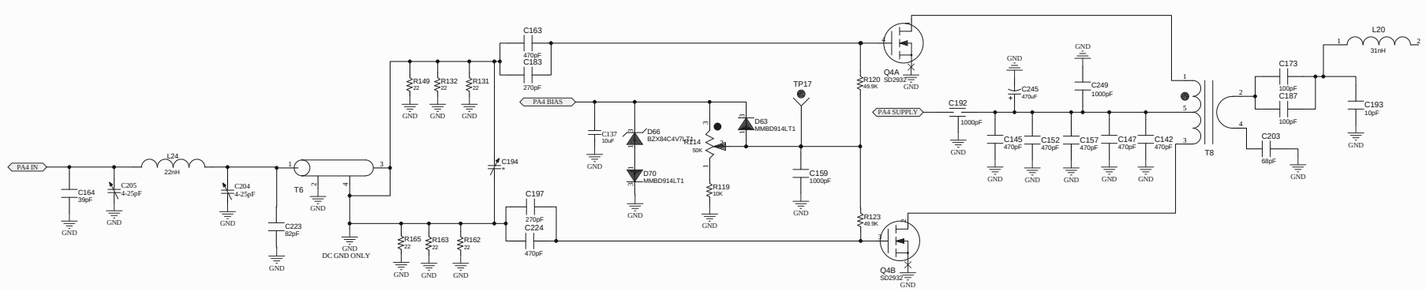

NOTES:

C101,C116,C194,C195 PLACED ON HIGHER LEVEL ASSY

DESIGNER J BRENNAN	MATERIAL	BROADCAST ELECTRONICS INC. 4100 N. 24TH ST., P.O.BOX 3606 QUINCY, IL 62305 217/224-9600 FAX 217/224-9607	
ENGINEER T HEA	FINISH		
PROPRIETARY RIGHTS are included in information disclosed herein. This information is submitted in confidence and is to be used only for the purpose for which the disclosed herein shall be reproduced or transferred to other documents or used or disclosed to others for manufacturing or for any other purpose except as specifically authorized in writing by BROADCAST ELECTRONICS, INC.	TOLERANCE U.O.S. .x ± .030 .xx ± .015 .xxx ± .005 ANGLES ± 1	TITLE SCHEMATIC, STX LP PA	
		TYPE S SIZE D DWG. NO. 919-4050	REV C
		MODEL STX LP SCALE	SHEET 3 OF 4

REVISIONS				
REV	DATE	DESCRIPTION	DRAFTER	ECN
A	4-25-09	RELEASE TO PRODUCTION	JTB	
B	7-11-09	ADD TEST POINTS	JTB	11697
C	1-13-10	MADE L38 (350-202), MADE L39 (366-0022-001)	JTB	11700

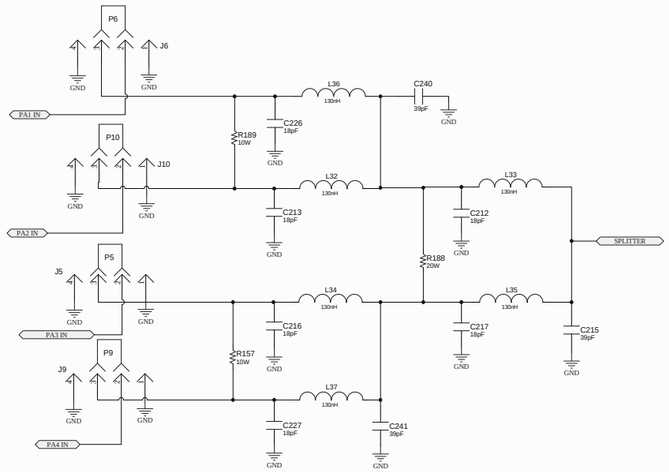

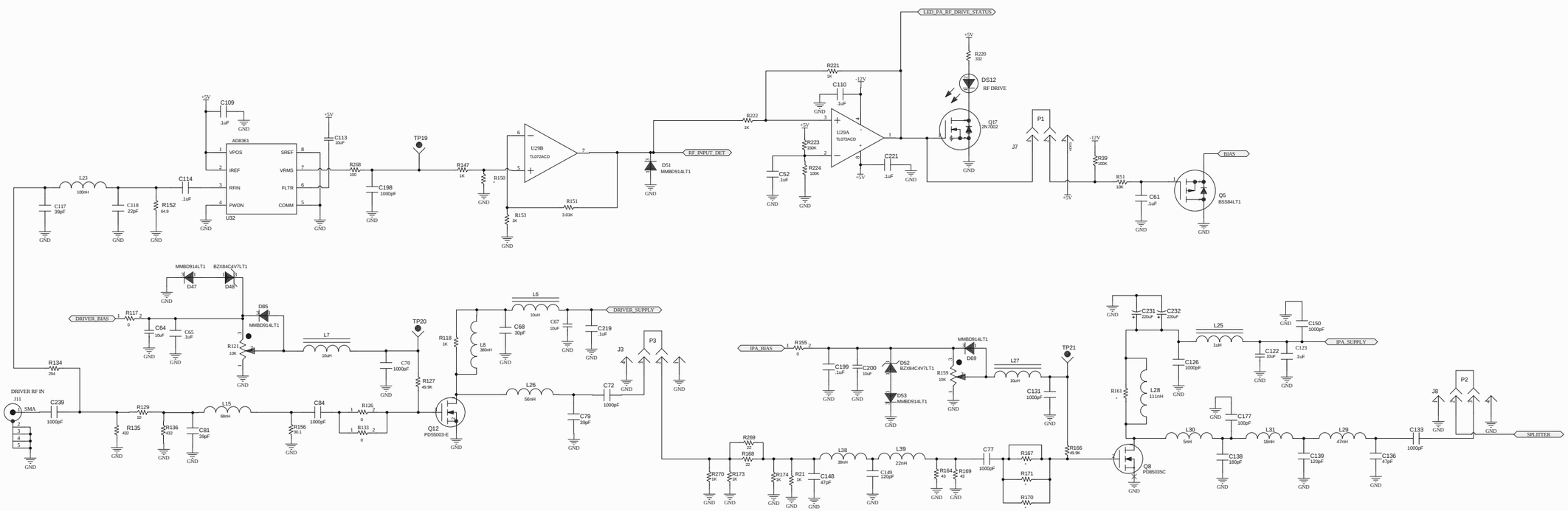

DESIGNER J BRENNAN	MATERIAL	BROADCAST ELECTRONICS INC. 4100 N. 24TH ST., P.O.BOX 3606 QUINCY, IL. 62305 217/224-9600 FAX 217/224-9607	
ENGINEER T HEA	FINISH		
PROPRIETARY RIGHTS are included in information disclosed herein. This document is proprietary to Broadcast Electronics and neither this document nor the information disclosed herein shall be reproduced or transferred to other documents or used or disclosed to others for manufacture or for any other purpose except as specifically authorized in writing by BROADCAST ELECTRONICS, INC.	TOLERANCE U.O.S. .x ± .030 .xx ± .015 .xxx ± .005 ANGLES ± 1	TITLE SCHEMATIC, STX LP PA	
		TYPE S SIZE D DWG. NO. 919-4050	REV C
		MODEL STX LP SCALE	SHEET 4 OF 4

REVISIONS				
REV	DATE	DESCRIPTION	DRAFTER	ECN
A	4-24-09	RELEASE TO PRODUCTION	JTB	
B	7-15-09	ADD TEST POINTS, ADD C246-249	JTB	11697
C	1-13-10	FIXED SPELLING ERROR	JTB	11700

NO RTV ON CAPS C242,243,244,245 PRIOR TO INSTALLING BOARD HEATSINK.

INSTALL 360-4208 ACROSS +48V PADS WHERE SHOWN

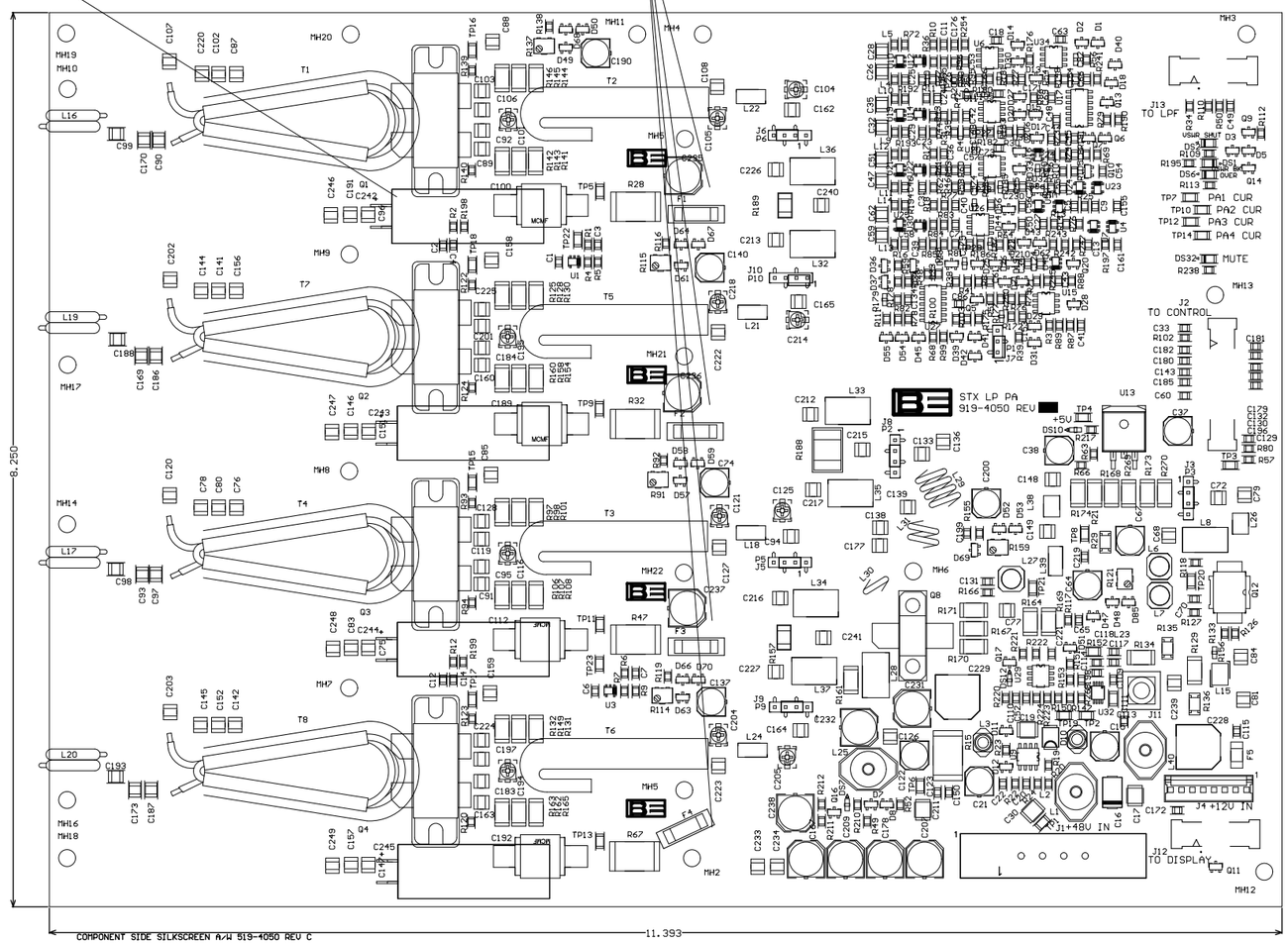

360-4208 (SIDE VIEW)

NOTES: U2 AND U8 ARE PLACED ON BOTTOM OF BOARD

DESIGNER	MATERIAL
ENGINEER	FINISH
PROPRIETARY RIGHTS are included in information disclosed herein. This information is submitted in confidence and neither this document nor the information disclosed herein shall be reproduced or transferred to other documents or used or disclosed to others for manufacturing or for any other purpose except as specifically authorized in writing by BROADCAST ELECTRONICS, INC.	TOLERANCE U.O.S. .x ± .030 .xx ± .015 .xxx ± .005 ANGLES ± 1

BROADCAST ELECTRONICS INC.
4100 N. 24TH ST., P.O.BOX 3606 QUINCY, IL. 62305
217/224-9600 FAX 217/224-9607

TITLE	PCB ASSY PA		
TYPE	SIZE D	DWG. NO. 919-4050	REV C
MODEL STX LP		SCALE	SHEET 1 OF 1

REVISIONS					
REV	DATE	DESCRIPTION	DFTSMN	ENGR	ECN
A	4-6-09	RELEASE TO PRODUCTION	JTB	TH	-----
B	7-8-09	ADDED RF CABLES TO BOM	JTB	TH	11696

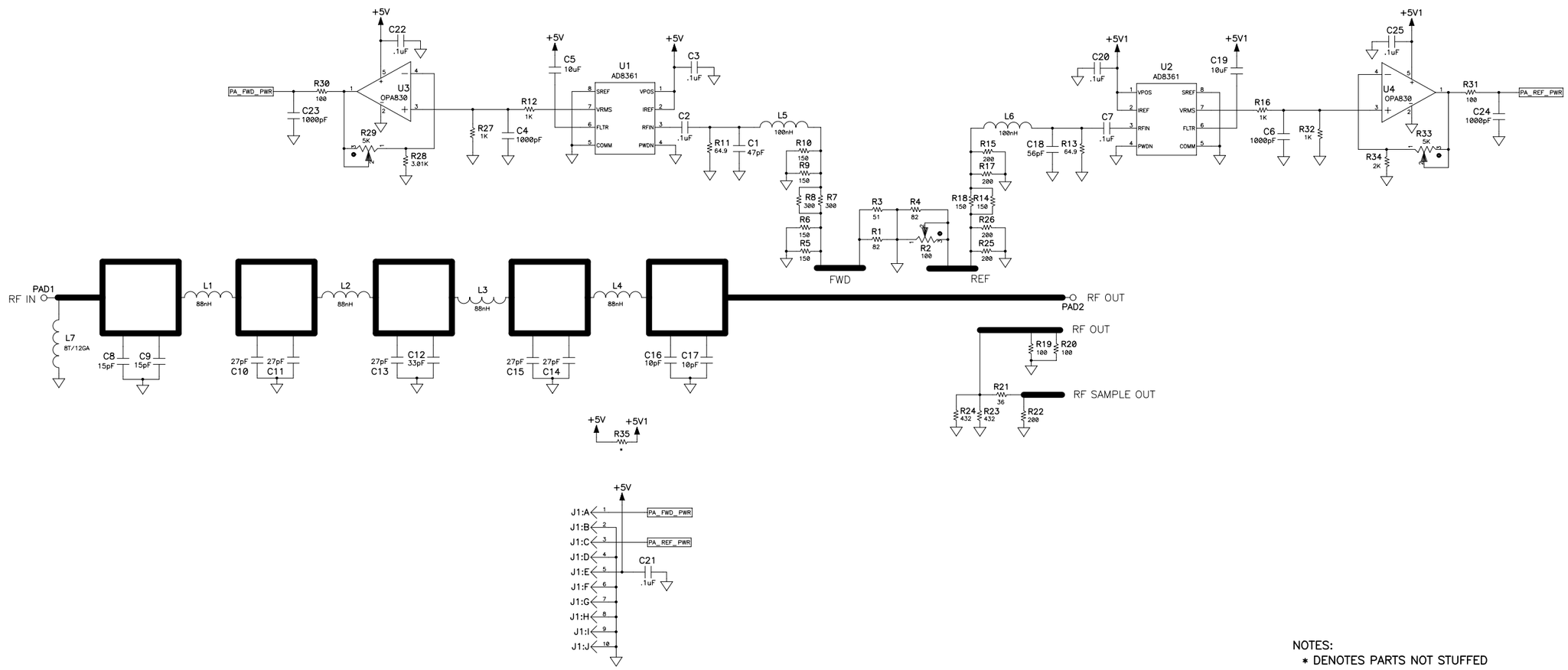

NOTES:
* DENOTES PARTS NOT STUFFED

COPYRIGHT © 2006 BROADCAST ELECTRONICS, INC.

PROPRIETARY RIGHTS are included in information disclosed herein. This information is submitted in confidence and neither this document nor the information disclosed herein shall be reproduced or transferred to other documents or used or disclosed to others for manufacturing or for any other purpose except as specifically authorized in writing by BROADCAST ELECTRONICS, INC.

TOLERANCE (DECIMAL) U.O.S.
.x + .030 .xxx + .005
.xx + .015 ANGLES + 1

DWN. BY: JTB
DESIGNER(S): TH
DATE: 4-6-09
MFG.

MATERIAL: SEE BOM 919-4060
FINISH
NEXT ASSY.

BROADCAST ELECTRONICS INC.
4100 N. 24TH ST., P.O.BOX 3606 QUINCY, IL. 62305
217/224-9600 FAX 217/224-9607

TITLE: STX LP LPF

TYPE	SIZE	DWG. NO.	REV
S	D	919-4060	B

MODEL: STX LP SCALE: NONE SHEET 1 OF 1

REVISIONS					
REV	DATE	DESCRIPTION	DRAFTER	APPROVED	ECN
A	4-6-09	RELEASE TO PRODUCTION	JTB	T HEA	
B	7-6-09	CHG'D VIAS TO .040	JTB	T HEA	11696
C	2-9-10	MADE ASSY /-716, AND ADD 610-0018 TO ASSY NOTES	JTB	T HEA	11753

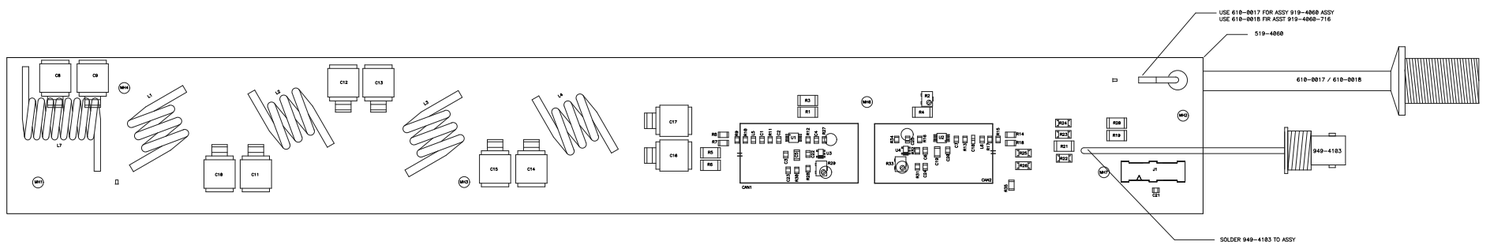

PROPRIETARY RIGHTS are included in information disclosed herein. This information is submitted in confidence and neither this document nor the information disclosed herein shall be reproduced or transferred to other documents or used or disclosed to others for manufacturing or for any other purpose except as specifically authorized in writing by BROADCAST ELECTRONICS, INC.

TOLERANCE (DECIMAL) U.O.S.
.X ± .030 .XXX ± .005
.XX ± .015 ANGLES ± 1 °

COPYRIGHT © 2009 BROADCAST ELECTRONICS, INC.

DWN. BY: JTB
DESIGNER(S): TH
PROJ. LEADER:
MFG.
MATERIAL:
FINISH:
NEXT ASSY.

BROADCAST ELECTRONICS INC.
4100 N. 24TH ST. P.O.BOX 3606 QUINCY,IL. 62305
217/224-9600 FAX 217/224-9607

TITLE: LOW PASS FILTER BOARD

TYPE	SIZE	DWG No.	REV
A	D	919-4060/716	C

MODEL: STX LP SCALE: 1/1 SHEET 1 OF 1

REVISIONS				
REV	DATE	DESCRIPTION	DRAFTER	ECN
A	8-20-09	RELEASE TO PRODUCTION	JTB	

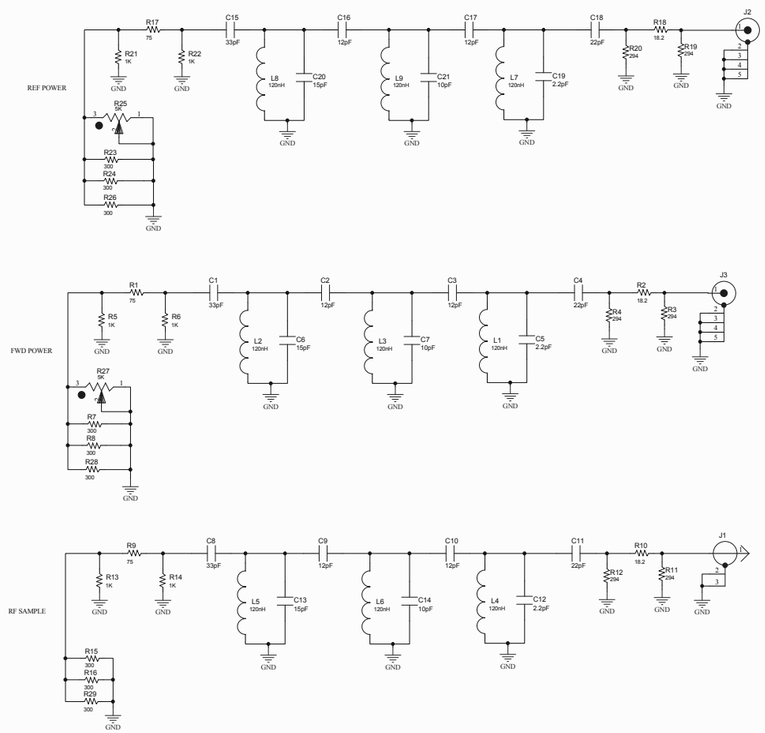

DESIGNER J BRENNAN	MATERIAL	BROADCAST ELECTRONICS INC. 4100 N. 24TH ST., P.O.BOX 3606 QUINCY, IL 62305 217/224-9600 FAX 217/224-9607	
ENGINEER K MURPHY	FINISH		
PROPRIETARY RIGHTS are included in information disclosed herein. This information is submitted in confidence and its possession by recipient of information disclosed herein shall be reproduced or transferred to other documents or used or disclosed to others for manufacturing or for any other purpose except as specifically authorized in writing by BROADCAST ELECTRONICS, INC.	TOLERANCE U.O.S. .x ± .030 .xx ± .015 .xxx ± .005 ANGLES ± 1	TITLE SCHEMATIC, STX LP 3 WAY COMB	
		TYPE S SIZE D DWG. NO. 919-4065	REV A
		MODEL STX LP SCALE	SHEET 1 OF 1

REVISIONS				
REV	DATE	DESCRIPTION	DRAFTER	ECN
A	8-20-09	RELEASE TO PRODUCTION	JTB	

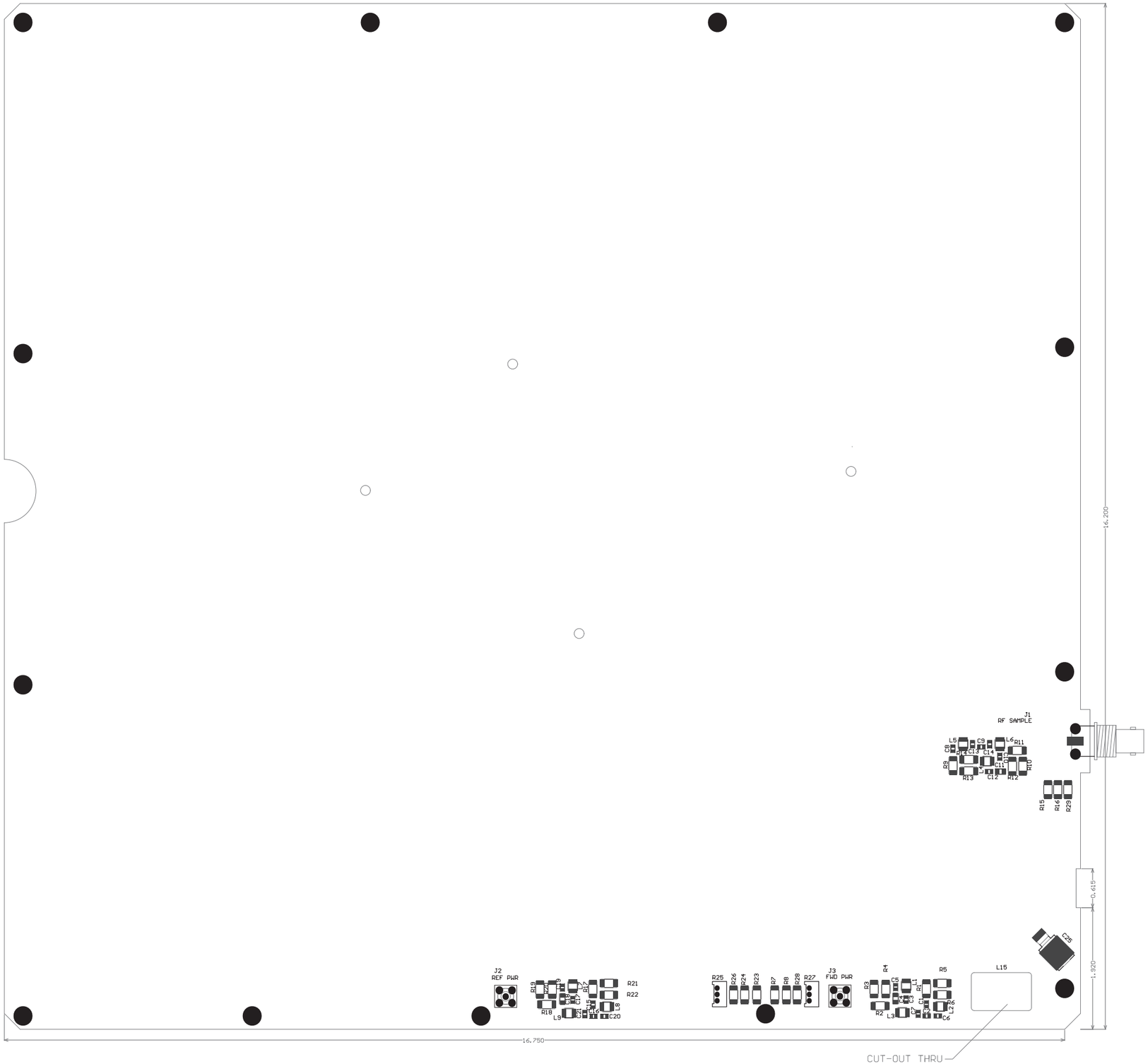

COMPONENT SIDE SILKSCREEN A/W 519-4065 REV A

NOTES:
1. MATERIAL: 0.062 IN. FIBERGLASS REINFORCED EPOXY. NEMO GRADE FR4. NATURAL COLOR WITHOUT OPAQUE 4 OZ. COPPER CLAD OUTER LAYERS
2. HASL
3. SOLDERMASK ONLY ON TOP SIDE
4. SILKSCREEN ON TOP SIDE ONLY ON BOARD
5. CIRCUIT BOARD TO BE ELECTRICALLY TESTED BY VENDOR FOR TRACE CONTINUITY AND PROOF AGAINST TRACE SHORTS.
6. ALL RADIUS .047 UNLESS OTHERWISE NOTED....

DESIGNER J. BRENNAN	MATERIAL .062 FR4	BROADCAST ELECTRONICS INC. 4100 N. 24TH ST., P.O.BOX 3606 QUINCY, IL. 62305 217/224-9600 FAX 217/224-9607
ENGINEER K. MURPHY	FINISH HASL	
PROPRIETARY RIGHTS are included in information disclosed herein. This information is submitted in confidence and neither this document nor the information disclosed herein shall be reproduced or transferred to other documents or used or disclosed to others for manufacturing or for any other purpose except as specifically authorized in writing by BROADCAST ELECTRONICS, INC.	TOLERANCE U.O.S. .x ± .030 .xx ± .015 .xxx ± .005 ANGLES ± 1	TITLE AUDIO FRAME 3WAY COMBINER
		TYPE A SIZE D DWG. NO. 519-4065 REV AA
		MODEL STX LP SCALE 1:1 SHEET 11 OF 11

REVISIONS				
REV	DATE	DESCRIPTION	DRAFTER	ECN
A	11-4-09	RELEASE TO PRODUCTION	JTB	

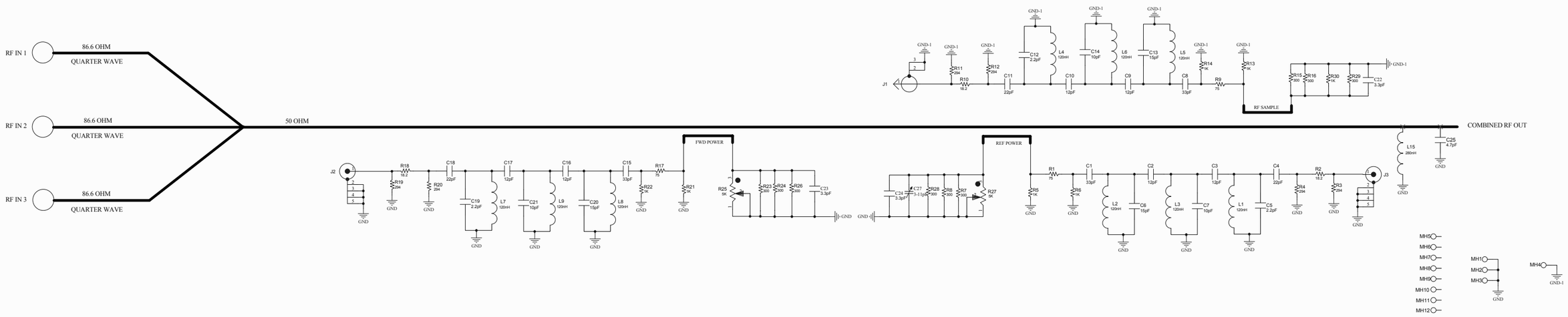

DESIGNER J BRENNAN	MATERIAL	BROADCAST ELECTRONICS INC. 4100 N. 24TH ST., P.O.BOX 3606 QUINCY, IL 62305 217/224-9600 FAX 217/224-9607	
ENGINEER K MURPHY	FINISH		
PROPRIETARY RIGHTS are included in information disclosed herein. This information is submitted in confidence and is not to be disclosed. No information disclosed herein shall be reproduced or transferred to other documents or used or disclosed to others for any purpose nor used for other purpose except as specifically authorized in writing by BROADCAST ELECTRONICS, INC.	TOLERANCE U.O.S. .x ± .030 .xx ± .015 .xxx ± .005 ANGLES ± 1	TITLE SCHEMATIC, STX LP 3 WAY COMB	
		TYPE S SIZE D DWG. NO. 919-4065-001	REV A
		MODEL STX LP SCALE	SHEET 1 OF 1

REVISIONS				
REV	DATE	DESCRIPTION	DRAFTER	ECN
A	8-20-09	RELEASE TO PRODUCTION	JTB	

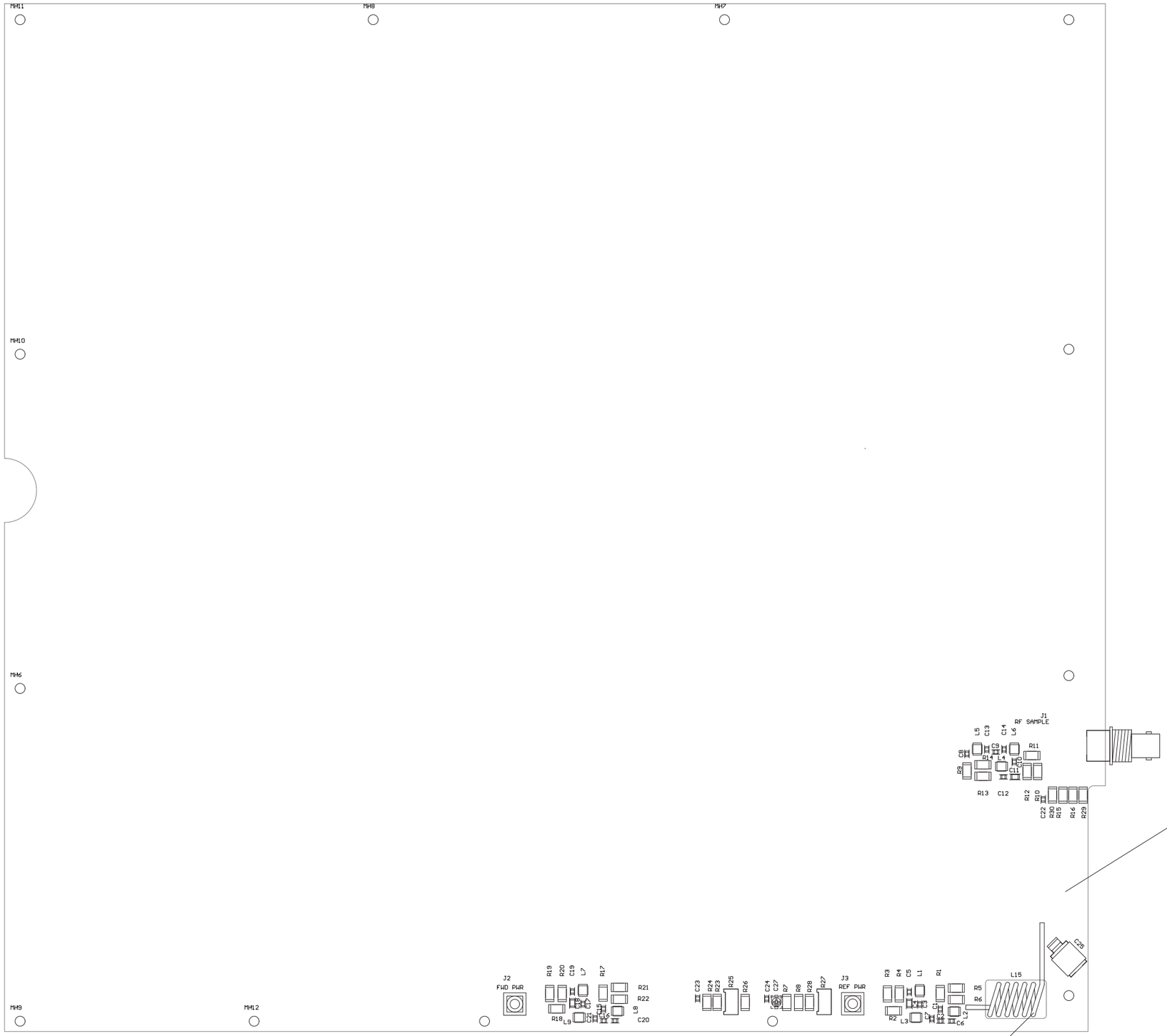

INSTALL PEM NO. KFS2-.032,
2 PLCS. ON OPP. SIDE
426-0000

L15 INSTALLED WITH LEADS ON BTM OF PCB

COMPONENT SIDE SILKSCREEN A-W 519-4065-001 REV A

DESIGNER: J BRENNAN	MATERIAL: .062 FR4	BROADCAST ELECTRONICS INC. 4100 N. 24TH ST., P.O.BOX 3606 QUINCY, IL. 62305 217/224-9600 FAX 217/224-9607
ENGINEER: K MURPHY	FINISH: HASL	
PROPRIETARY RIGHTS are included in information disclosed herein. This information is submitted in confidence and in trust. Neither the information disclosed herein shall be reproduced or transferred to other documents or used or disclosed to others for manufacturing or for any other purpose except as specifically authorized in writing by BROADCAST ELECTRONICS, INC.	TOLERANCE U.O.S. .x ± .030 .xx ± .015 .xxx ± .005 ANGLES ± 1	TITLE: PCB FAB 3WAY COMBINER
		TYPE A / SIZE / DWG. NO. 919-4065-001 / REV A
		MODEL / SCALE 1:1 / SHEET 1 OF 1

REVISIONS					
REV	DATE	DESCRIPTION	DFTSMN	ENGR	ECN
A	4-18-09	RELEASE TO PRODUCTION	JTB	DWK	-----
B	10-9-09	MADE C4-C21 (007-1044)	JTB	DWK	11712

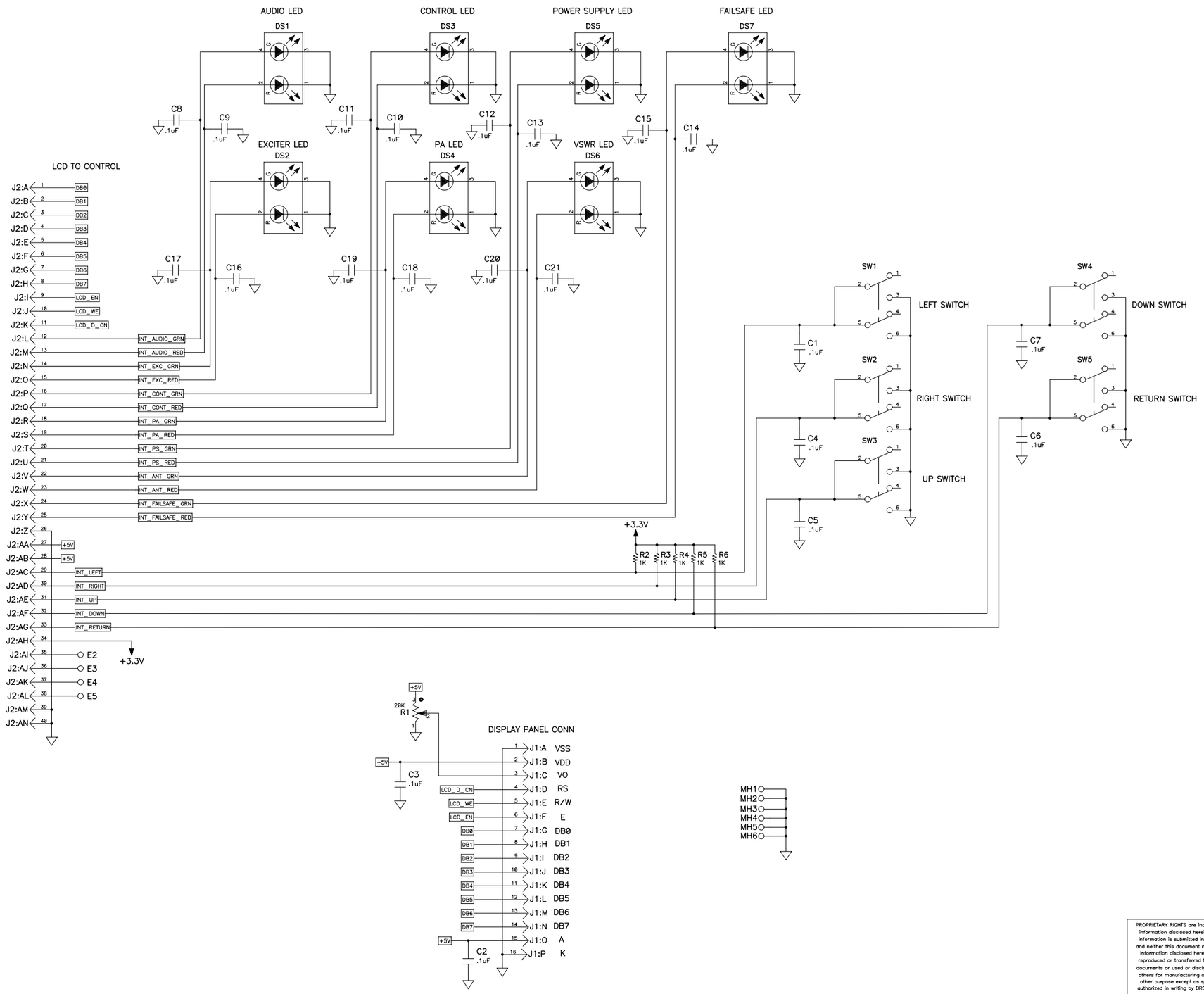

Spare Gate Table		
Last Used	Not Used	Spare Gates
C21		
DS7		
E5	E1	
J2		
MH6		
R6		
SW5		

COPYRIGHT © 2006 BROADCAST ELECTRONICS, INC.

PROPRIETARY RIGHTS are included in information disclosed herein. This information is submitted in confidence and neither this document nor the information disclosed herein shall be reproduced or transferred to other documents or used or disclosed to others for manufacturing or for any other purpose except as specifically authorized in writing by BROADCAST ELECTRONICS, INC.

TOLERANCE (DECIMAL) U.O.S.
.x + .030 .xxx + .005
.xx + .015 ANGLES + 1

DWN. BY JTB
DESIGNER(S) DWK
DATE
MFG.

MATERIAL SEE BOM 919-4070
FINISH
NEXT ASSY.

BROADCAST ELECTRONICS INC.
4100 N. 24TH ST., P.O.BOX 3606 QUINCY, IL. 62305
217/224-9600 FAX 217/224-9607

TITLE SCHEMATIC, STX LP DISPLAY BOARD

TYPE	SIZE	DWG. NO.	REV
S	D	919-4070	B

MODEL XPi 10esp SCALE NONE SHEET 1 OF 1

REVISIONS					
REV	DATE	DESCRIPTION	DRAFTER	APPROVED	ECN
A	4–18–09	RELEASE TO PRODUCTION	JTB	DWK	–––––
B	10–9–09	C4–C21 WERE NOT PLACED. NOW 007–1044	JTB	DWK	11712
C	3–18–10	ADD ASSY NOTES	JTB	DWK	11752

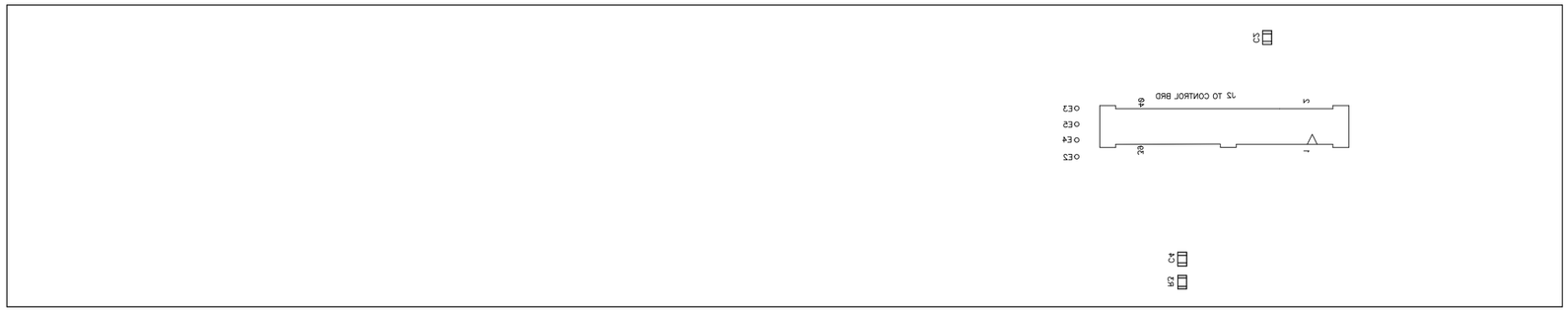

BTM ASSY

440–0301 (4 PLCS) INSTALLED
ON TOP SIDE (BETWEEN LCD AND PCB)
FOR MH7,MH8,MH9 AND MH10

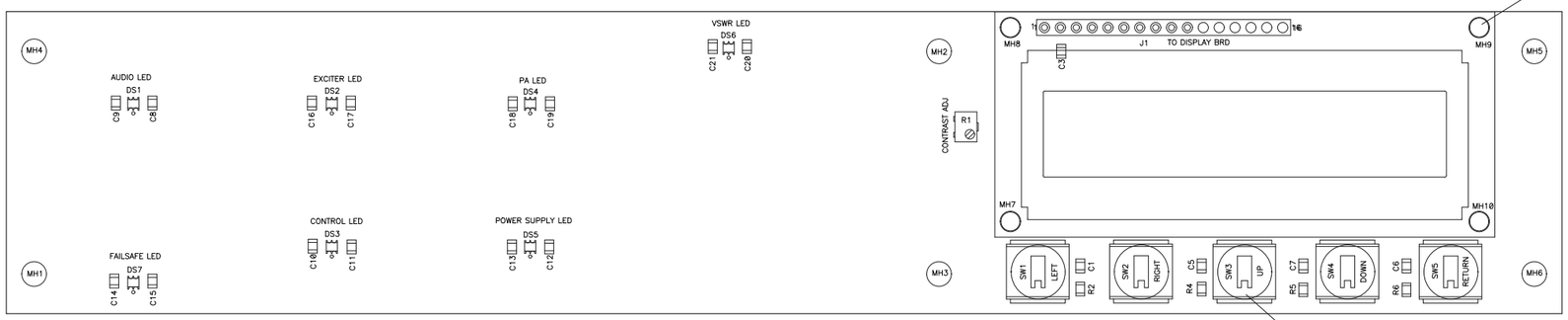

TOP ASSY

AFTER CAP INSTALLATION, MEASURE TO TOP OF CAP TO ENSURE
.800 FROM TOP OF PCB.

PROPRIETARY RIGHTS are included in information disclosed herein. This information is submitted in confidence and neither this document nor the information disclosed herein shall be reproduced or transferred to other documents or used or disclosed to others for manufacturing or for any other purpose except as specifically authorized in writing by BROADCAST ELECTRONICS, INC.

TOLERANCE (DECIMAL) U.O.S.

.X + .030 .XXX + .005
.XX + .015 ANGLES + 1 °

DWN. BY: JTB 8–17–08

DESIGNER(S): DWK 8–17–08

PROJ. LEADER

MFG.

MATERIAL: SEE BOM 919–4070

FINISH

NEXT ASSY.

BROADCAST ELECTRONICS INC.
4100 N. 24TH ST. P.O.BOX 3606 QUINCY,IL. 62305
217/224–9600 FAX 217/224–9607

TITLE: STX LP DISPLAY BOARD

TYPE	SIZE	DWG No.	REV
A	B	919–4070	C

MODEL: STX LP SCALE: 1/1 SHEET 1 OF 1

REVISIONS					
REV	DATE	DESCRIPTION	DFTSMN	ENGR	ECN
A	7-31-09	RELEASE TO PRODUCTION	JTB	KM	------

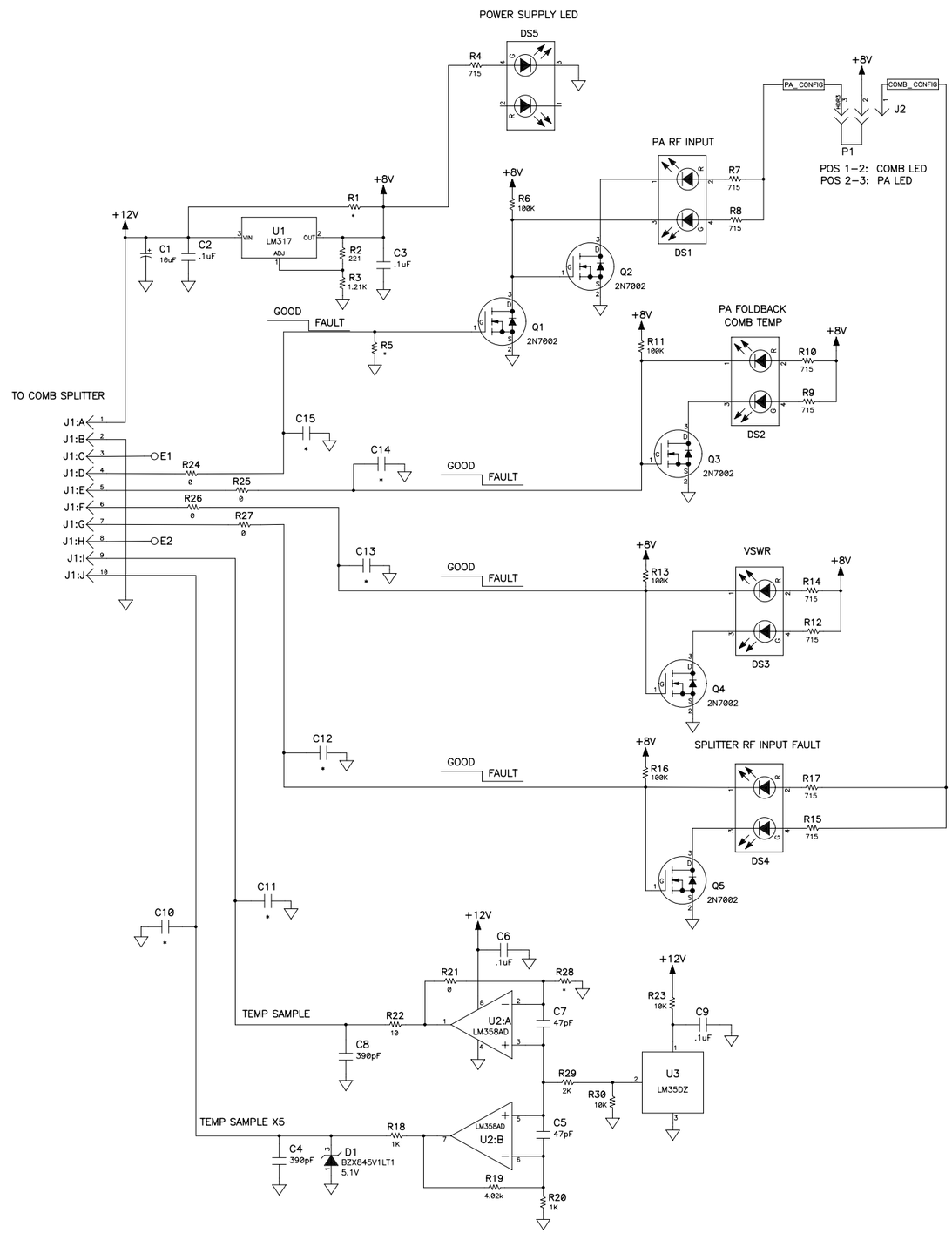

Spare Gate Table		
Last Used	Not Used	Spare Gates
C15		
D1		
DS5		
E2		
J2		
MH6		
P1		
Q5		
R30		
U3		

MH1
MH2
MH3
MH4
MH5
MH6

PROPRIETARY RIGHTS are included in information disclosed herein. This information is submitted in confidence and neither this document nor the information disclosed herein shall be reproduced or transferred to other documents or used or disclosed to others for manufacturing or for any other purpose except as specifically authorized in writing by BROADCAST ELECTRONICS, INC.

TOLERANCE (DECIMAL) U.O.S.
.x ± .030 .xxx ± .005
.xx ± .015 ANGLES ± 1

DWN. BY: JTB
DESIGNER(S): KM
DATE: 3-11-09
MFG.

MATERIAL: SEE BOM 919-4075
FINISH
NEXT ASSY.

COPYRIGHT © 2006 BROADCAST ELECTRONICS, INC.

BROADCAST ELECTRONICS INC.
4100 N. 24TH ST., P.O.BOX 3606 QUINCY, IL. 62305
217/224-9600 FAX 217/224-9607

TITLE: STX LP PA/COMBINER DISPLAY BOARD

TYPE	SIZE	DWG. NO.	REV
S	D	919-4075	A

MODEL STX LP | SCALE NONE | SHEET 1 OF 1

REVISIONS					
REV	DATE	DESCRIPTION	DRAFTER	APPROVED	ECN
A	8-30-09	RELEASE TO PRODUCTION	JTB	KM	-----

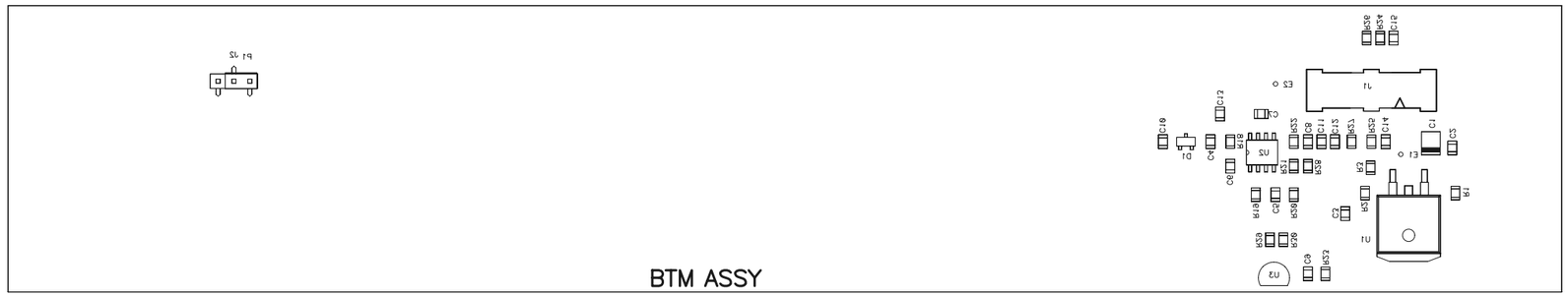

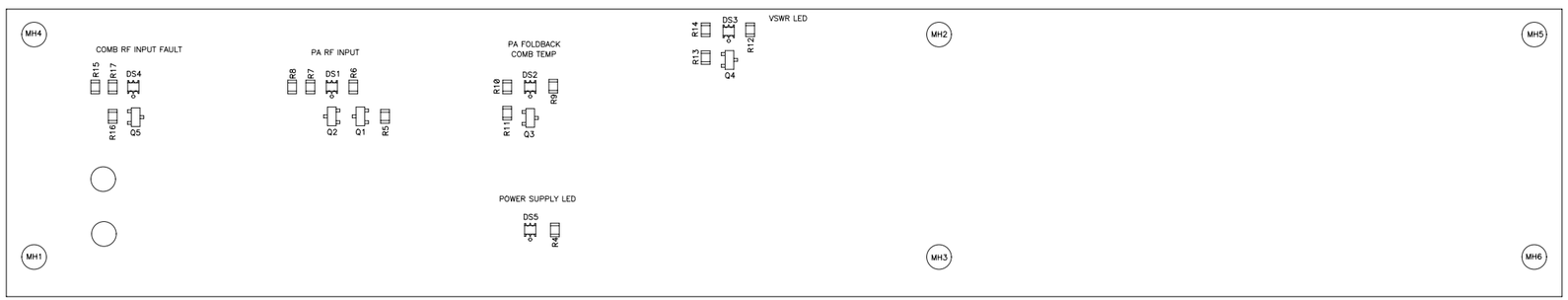

TOP ASSY

PROPRIETARY RIGHTS are included in information disclosed herein. This information is submitted in confidence and neither this document nor the information disclosed herein shall be reproduced or transferred to other documents or used or disclosed to others for manufacturing or for any other purpose except as specifically authorized in writing by BROADCAST ELECTRONICS, INC.

TOLERANCE (DECIMAL) U.O.S.
.X + .030 .XXX + .005
.XX + .015 ANGLES + 1 °

DWN. BY: JTB 3-12-09
DESIGNER(S): KM 3-12-09
PROJ. LEADER:
MFG.:

MATERIAL: SEE BOM 919-4075
FINISH:
NEXT ASSY.:

BROADCAST ELECTRONICS INC.
4100 N. 24TH ST. P.O.BOX 3606 QUINCY,IL. 62305
217/224-9600 FAX 217/224-9607

TITLE: STX LP PA\COMB LED BOARD

TYPE	SIZE	DWG No.	REV
A	B	919-4075	A

MODEL: STX LP SCALE: 1/1 SHEET 1 OF 1

REVISIONS				
REV	DATE	DESCRIPTION	DRAFTER	ECN
A	11-06-09	RELEASE TO PRODUCTION	JTB	

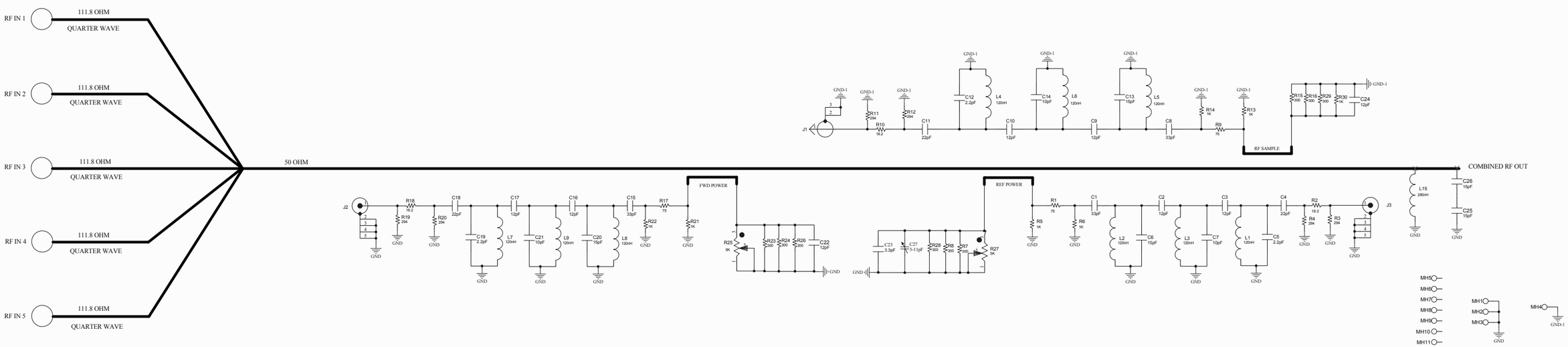

DESIGNER J BRENNAN	MATERIAL	BROADCAST ELECTRONICS INC. 4100 N. 24TH ST., P.O.BOX 3606 QUINCY, IL 62305 217/224-9600 FAX 217/224-9607	
ENGINEER K MURPHY	FINISH		
PROPRIETARY RIGHTS are included in information xbY SUBMITTED. This information is submitted in confidence and neither this document nor the information disclosed herein shall be reproduced or transferred to other documents or disclosed to others for manufacturing or for any other purpose except as specifically authorized in writing by BROADCAST ELECTRONICS, INC.	TOLERANCE U.O.S. .x ± .030 .xx ± .015 .xxx ± .005 ANGLES ± 1	TITLE SCHEMATIC, 5 WAY COMBINER	
		TYPE S SIZE D DWG. NO. 919-4085-001	REV A
		MODEL STX LP SCALE	SHEET 1 OF 1

REVISIONS				
REV	DATE	DESCRIPTION	DRAFTER	ECN
A	10-30-09	RELEASE TO PRODUCTION	JTB	

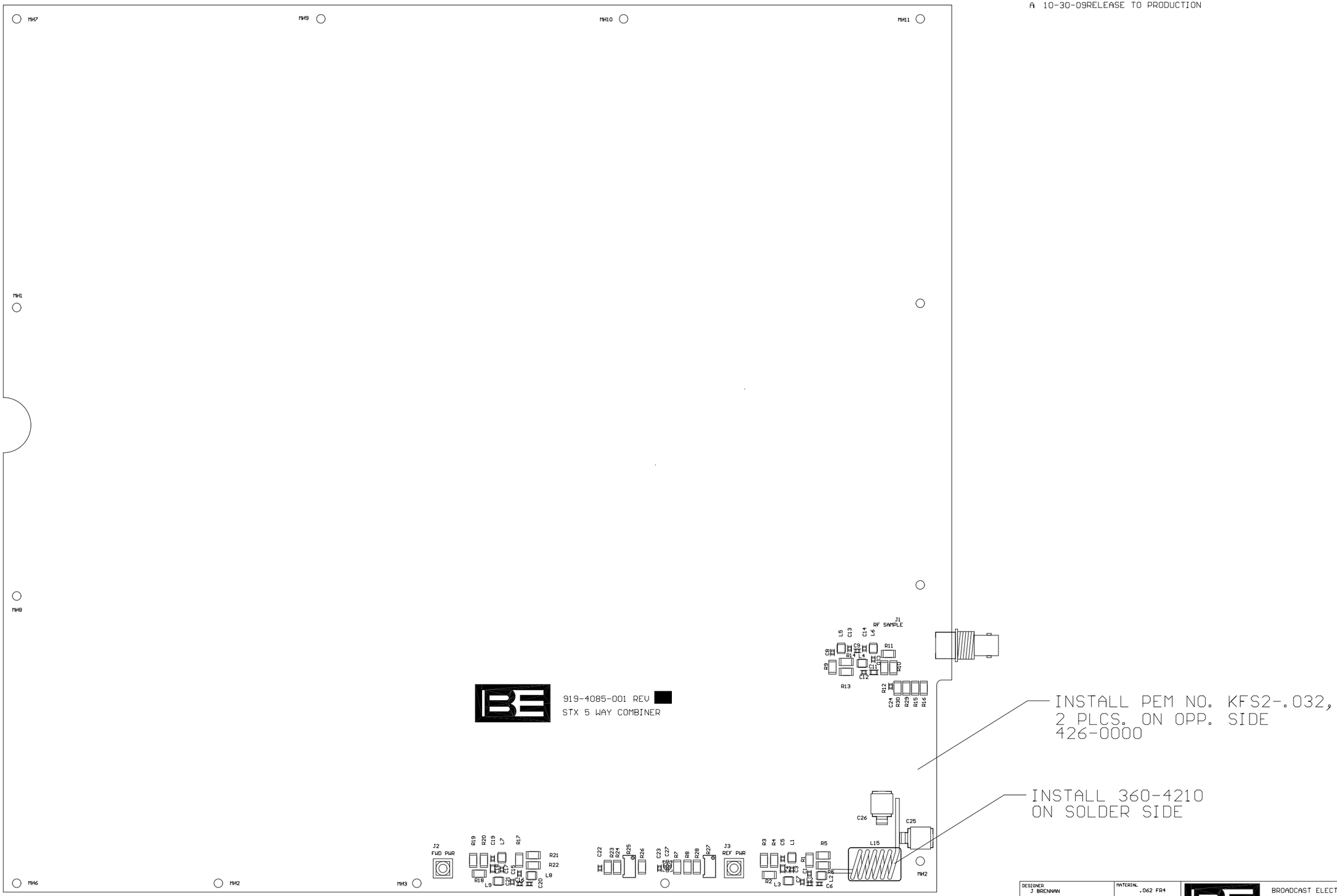

COMPONENT SIDE SILKSCREEN A/W 519-4085 -001 REV B

DESIGNER J BRENNAN	MATERIAL .062 FR4	BROADCAST ELECTRONICS INC. 4100 N. 24TH ST., P.O.BOX 3606 QUINCY, IL. 62305 217/224-9600 FAX 217/224-9607
ENGINEER K MURPHY	FINISH HASL	
PROPRIETARY RIGHTS are included in information disclosed herein. This information is submitted in confidence and is not to be disclosed. The information disclosed herein shall be reproduced or transferred to other documents or used or disclosed to others for manufacturing or for any other purpose except as specifically authorized in writing by BROADCAST ELECTRONICS, INC.	TOLERANCE U.O.S. .x ± .030 .xx ± .015 .xxx ± .005 ANGLES ± 1	TITLE PCB ASSY 5-WAY COMBINER
		TYPE A SIZE D DWG. NO. 919-4085-001 REV B
		MODEL STX LP SCALE 1:1 SHEET 1 OF 1

REVISIONS				
REV	DATE	DESCRIPTION	DRAFTER	ECN
A	14JUL11	RELEASE TO PRODUCTION	DLR	

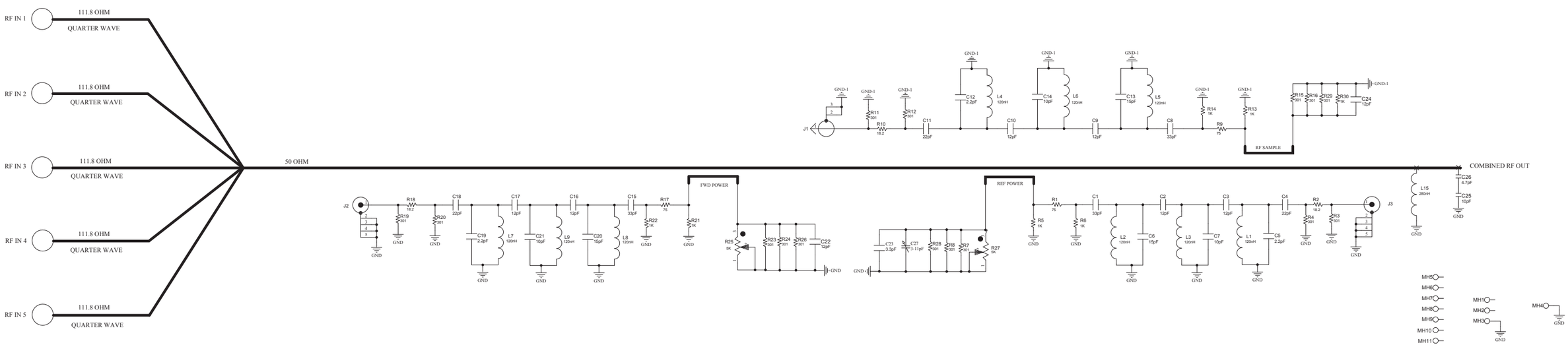

DESIGNER D Raab	MATERIAL	BROADCAST ELECTRONICS INC. 4100 N. 24TH ST., P.O.BOX 3606 QUINCY, IL 62305 217/224-9600 FAX 217/224-9607	
ENGINEER J Simpson	FINISH		
PROPRIETARY RIGHTS are included in information disclosed herein. This document is loaned in confidence and neither this document nor the information disclosed herein shall be reproduced or transferred to other documents or used or disclosed to others for manufacture or for any other purpose except as specifically authorized in writing by BROADCAST ELECTRONICS, INC.	TOLERANCE U.O.S. .x ± .030 .xx ± .015 .xxx ± .005 ANGLES ± 1	TITLE SCHEMATIC, 5 WAY COMBINER	
		TYPE S SIZE D DWG. NO. 919-4085-100	REV A
		MODEL STX LP SCALE	SHEET 1 OF 1

REVISIONS				
REV	DATE	DESCRIPTION	DRAFTER	ECN
A	14JUL11	RELEASE TO PRODUCTION	DLR	

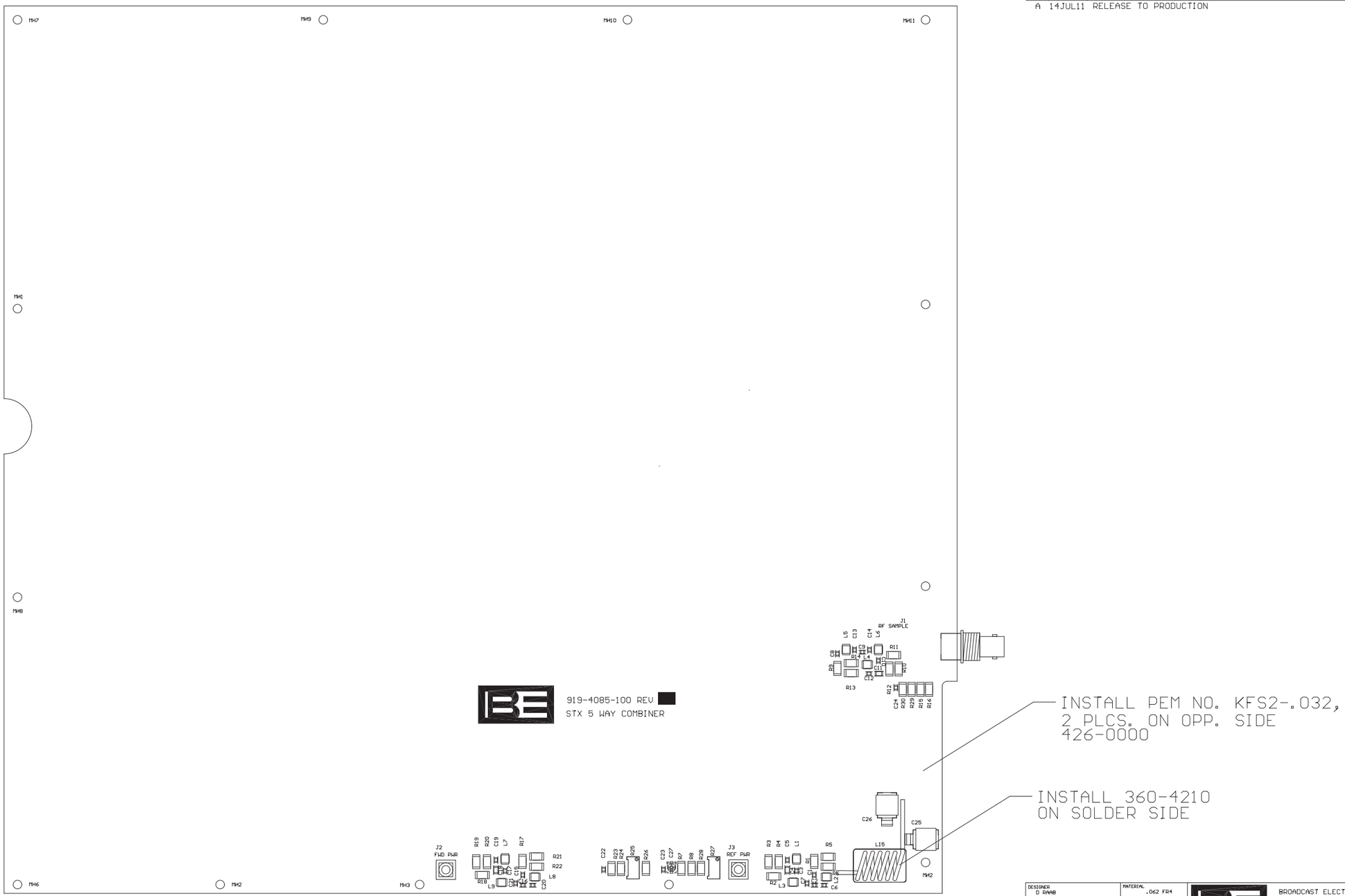

COMPONENT SIDE SILKSCREEN

DESIGNER D RAAB	MATERIAL .062 FR4	BROADCAST ELECTRONICS INC. 4100 N. 24TH ST., P.O.BOX 3606 QUINCY, IL 62305 217-224-9600 FAX 217-224-9607
ENGINEER J SIMPSON	FINISH HASL	
PROPRIETARY RIGHTS are included in information disclosed herein. This information is submitted in confidence and neither this document nor the information disclosed herein shall be reproduced or transferred to other documents or disclosed to others for manufacturing or for any other purpose except as specifically authorized in writing by BROADCAST ELECTRONICS, INC.	TOLERANCE U.O.S. .x ± .030 .xx ± .015 .xxx ± .005 ANGLES ± 1	TITLE PCB ASSY 5-WAY COMBINER
		TYPE A SIZE D DWG. NO. 919-4085-100 REV A
		MODEL STX LP SCALE 1:1 SHEET 1 OF 1

REV	DATE	DESCRIPTION	DRAWN	ECN
D	15DEC12	ADDED JUMPERS P7&P8(340-0004)	DLR	11933

REVISION HISTORY

REV	DATE	DESCRIPTION	DRAWN	ECN
A	08JUN11	PRELIMINARY RELEASE	DLR	
B	29JUL11	ADDED FAN CONTROL	DLR	
C	25AUG11	CHANGED U1 TO 221-0555	DLR	

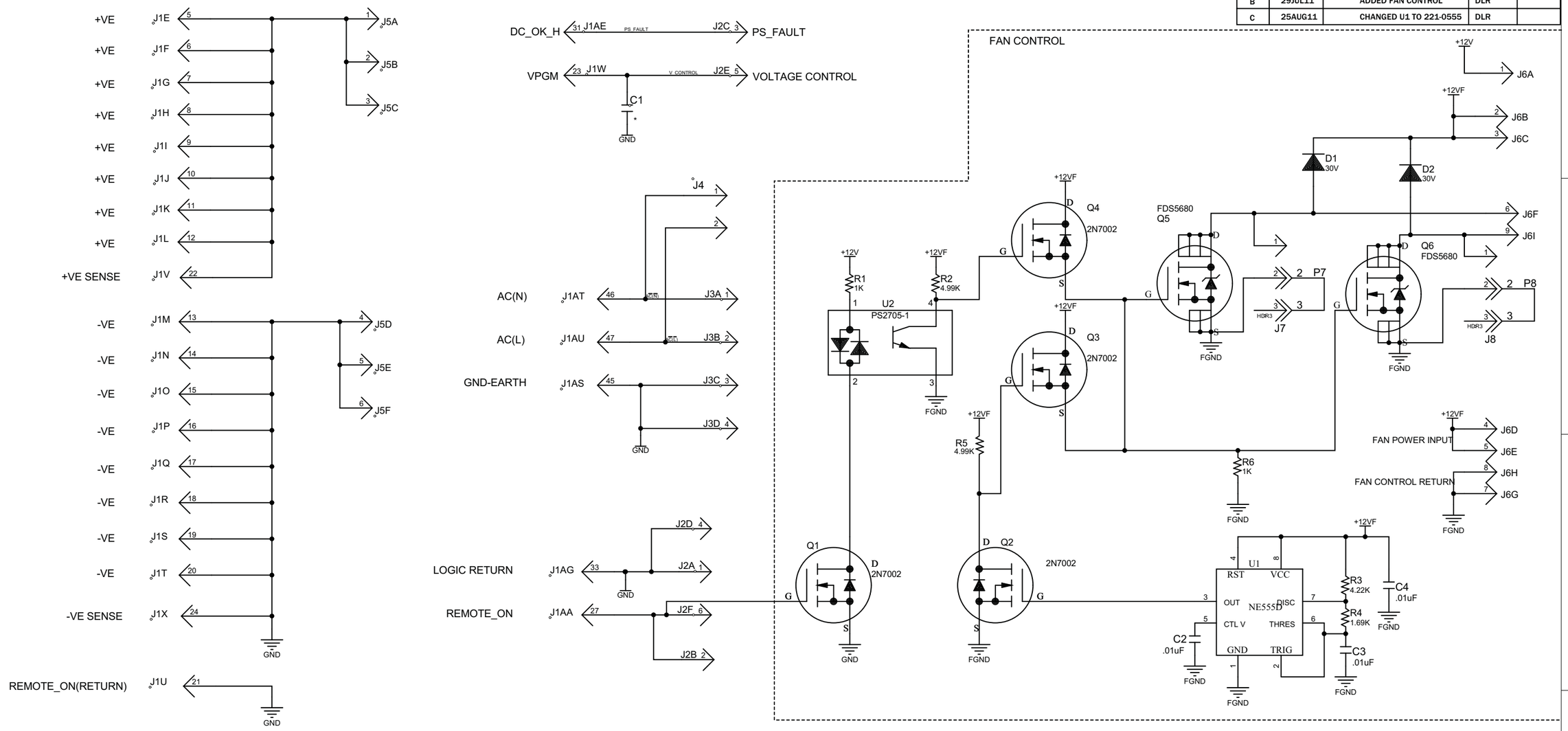

I SHARING	J1Z	26	NOT USED
OPT_WARNING	J1AB	28	NOT USED
AC_OK_H	J1AJ	36	NOT USED
P/S PRESENT	J1AL	38	NOT USED

NOTES:

* DENOTES NOT PLACED.....C1

COPYRIGHT © 2011BROADCAST ELECTRONICS, INC.

PROPRIETARY RIGHTS are included in information disclosed herein. This information is submitted in confidence and neither this document nor the information disclosed herein shall be reproduced or transferred to other documents or used or disclosed to others for manufacturing or for any other purpose except as specifically authorized in writing by BROADCAST ELECTRONICS, INC.

TOLERANCE (DECIMAL) U.O.S.
.x +/- .030 .xxx +/- .005
.xx +/- .015 ANGLES +/- 1°

DWN. BY
CHKD
ME
PROJ. ENGR.
MFG.

MATERIAL
FINISH
NEXT ASSY.

BROADCAST ELECTRONICS INC.
4100 N. 24TH ST., P.O.BOX 3606 QUINCY, IL. 62305 217/224-9600
TELEX 250142 CABLE BROADCAST FAX 217/224-9607

TITLE
SCHEMATIC

TYPE	SIZE	DWG. NO.	REV
S			

MODEL	SCALE	SHEET	OF

SEE BOM
919-4090-200

12/19/2011
1:39:25 PM

REVISION HISTORY				
REV	DATE	DESSCIPTION	DRAWN	ECN
A	08JUN11	PRELIMINARY RELEASE	DLR	——
B	12AUG11	ADD FAN CIRCUIT	DLR	——
C	25AUG11	CHANGD U1 TO 211-0555	DLR	——
D	15DEC12	ADD JUMPERS P7&P8(340-0004)	DLR	11933

NOTES

SET JUMPER P7 & P8
ON PINS 1&2 FOR NO FAN SPED CONTROL
ON PINS 2&3 FOR FAN SPED CONTROL *
* FACTORY DEFAULT

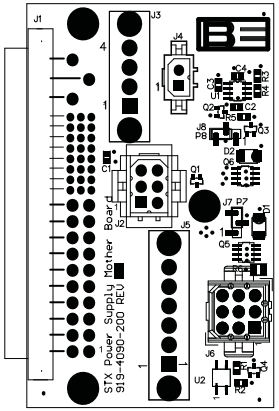

TOP SILKSCRMASK

COPYRIGHT © 2011 BROADCAST ELECTRONICS, INC.

PROPRIETARY RIGHTS are included in information disclosed herein. This information is submitted in confidence and neither this document nor the information disclosed herein shall be reproduced or transferred to other documents or used or disclosed to others for manufacturing or for any other purpose except as specifically authorized in writing by BROADCAST ELECTRONICS, INC.

TOLERANCE (DECIMAL) U.O.S.
.X +/- .030 .XXX +/- .005
.XX +/- .015 ANGLES +/- 1°

DWN. BY/DATE DLR 08JUN11
DESIGNER(S)/DATE
PROJ. LEADER/DATE
ME/DATE
MFG./DATE

MATERIAL
FINISH
NEXT ASSY.

BROADCAST ELECTRONICS INC.
4100 N. 24TH ST. P.O.BOX 3606 QUINCY,IL. 62305
217/224-9600 FAX 217/224-9607

TITLE STX Power Supply Mother Board ASSEMBLY DRAWWING

TYPE	SIZE	DWG No.	REV
A	C	919-4090-200	D

MODEL | SCALE NONE | SHEET 1 OF 1

12/19/2011 1:36:25 PM

REVISIONS					
REV	DATE	DESCRIPTION	DFTSMN	ENGR	ECN
A	7-30-09	RELEASE TO PRODUCTION	JTB		----

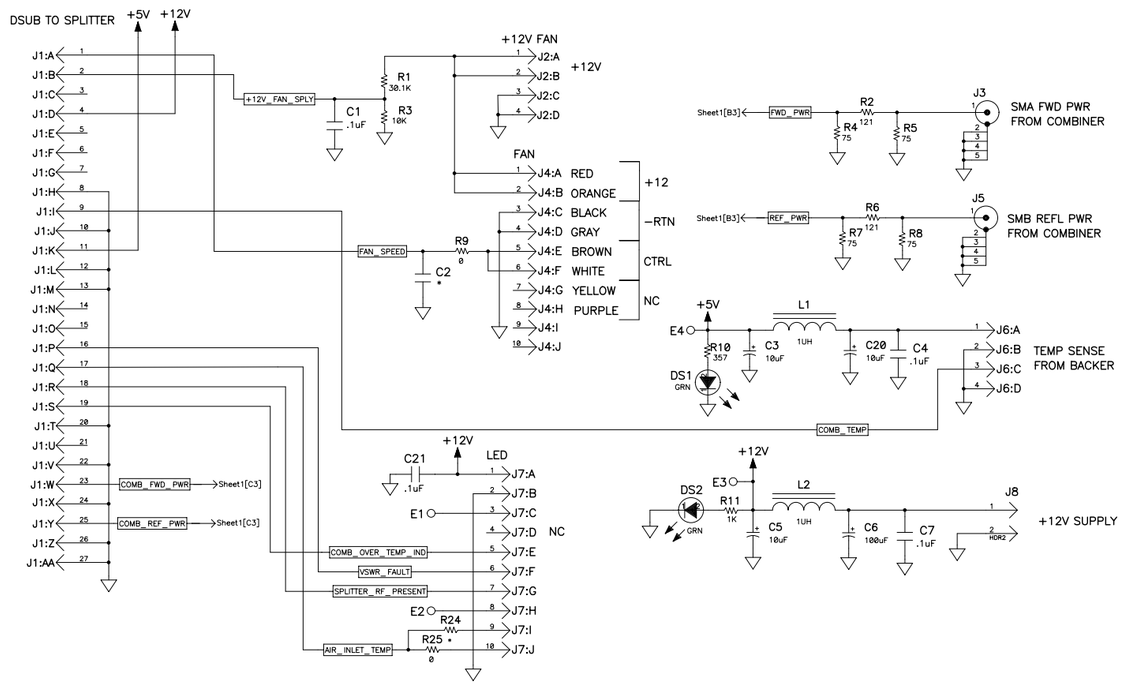

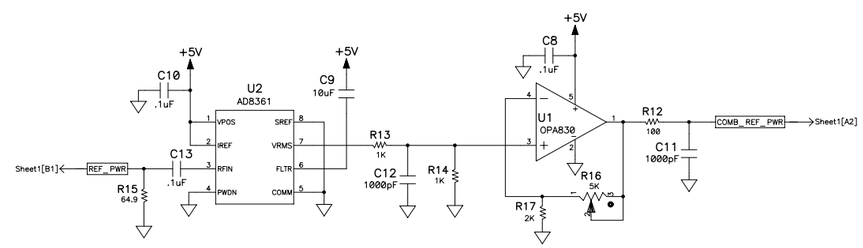

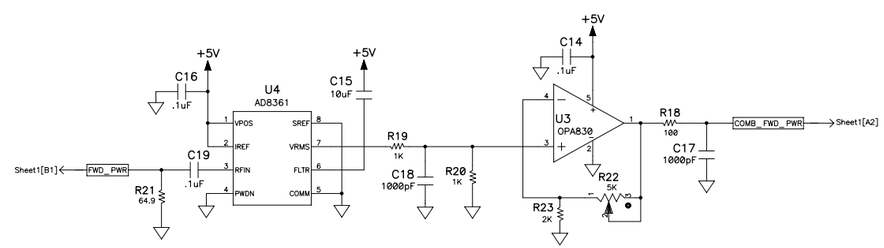

Spare Gate Table		
Last Used	Not Used	Spare Gates
C21		
DS2		
E4		
J8		
L2		
R25		
U4		

PROPRIETARY RIGHTS are included in information disclosed herein. This information is submitted in confidence and neither this document nor the information disclosed herein shall be reproduced or transferred to other documents or used or disclosed to others for manufacturing or for any other purpose except as specifically authorized in writing by BROADCAST ELECTRONICS, INC.

TOLERANCE (DECIMAL) U.O.S.
.x + .030 .xxx + .005
.xx + .015 ANGLES + 1

DWN. BY: JTB
DESIGNER(S): KM
DATE
MFG.

MATERIAL: SEE BOM 919-4095
FINISH
NEXT ASSY.

COPYRIGHT © 2006 BROADCAST ELECTRONICS, INC.

BROADCAST ELECTRONICS INC.
4100 N. 24TH ST., P.O.BOX 3606 QUINCY, IL 62305
217/224-9600 FAX 217/224-9607

TITLE: SCHEMATIC, STX LP FILTER BOARD

TYPE	SIZE	DWG. NO.	REV
S	D	919-4095	A

MODEL: STX LP SCALE: NONE SHEET 1 OF 1

REVISIONS					
REV	DATE	DESCRIPTION	DRAFTER	APPROVED	ECN
A	7–30–09	RELEASE TO PRODUCTION	JTB		----

TOP ASSY

519–4095

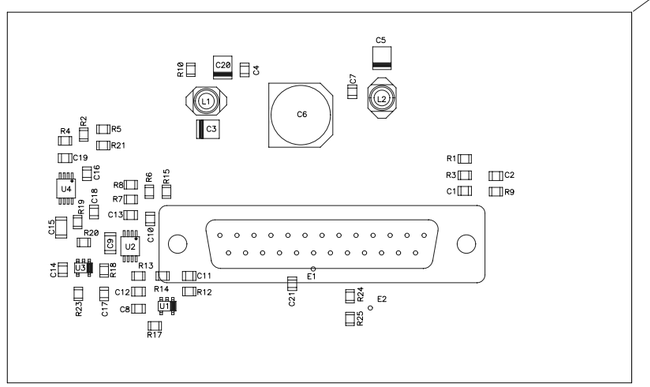

BTM ASSY

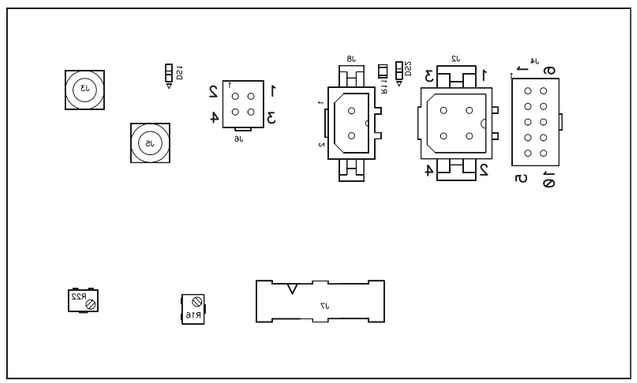

COPYRIGHT © 2009 BROADCAST ELECTRONICS, INC.

PROPRIETARY RIGHTS are included in information disclosed herein. This information is submitted in confidence and neither this document nor the information disclosed herein shall be reproduced or transferred to other documents or used or disclosed to others for manufacturing or for any other purpose except as specifically authorized in writing by BROADCAST ELECTRONICS, INC.

TOLERANCE (DECIMAL) U.O.S.

.X + .030 .XXX + .005

.XX + .015 ANGLES + 1 °

DWN. BY JTB 6–4–09

DESIGNER(S) KM 6–4–09

PROJ. LEADER

MFG.

MATERIAL

FINISH

SEE DWG RA592–0000

NEXT ASSY.

BROADCAST ELECTRONICS INC.

4100 N.24TH ST. P.O.BOX 3606 QUINCY,IL. 62305 PH. 217/224–9600
TELEX 250142 CABLE BROADCAST FAX 217/224–9607

TITLE PCB ASSEMBLY
STX LP FILTER BOARD

TYPE	SIZE	DWG No.	REV
A	B	919–4095	A

MODEL STX LP SCALE 1/1 SHEET 1 OF 1

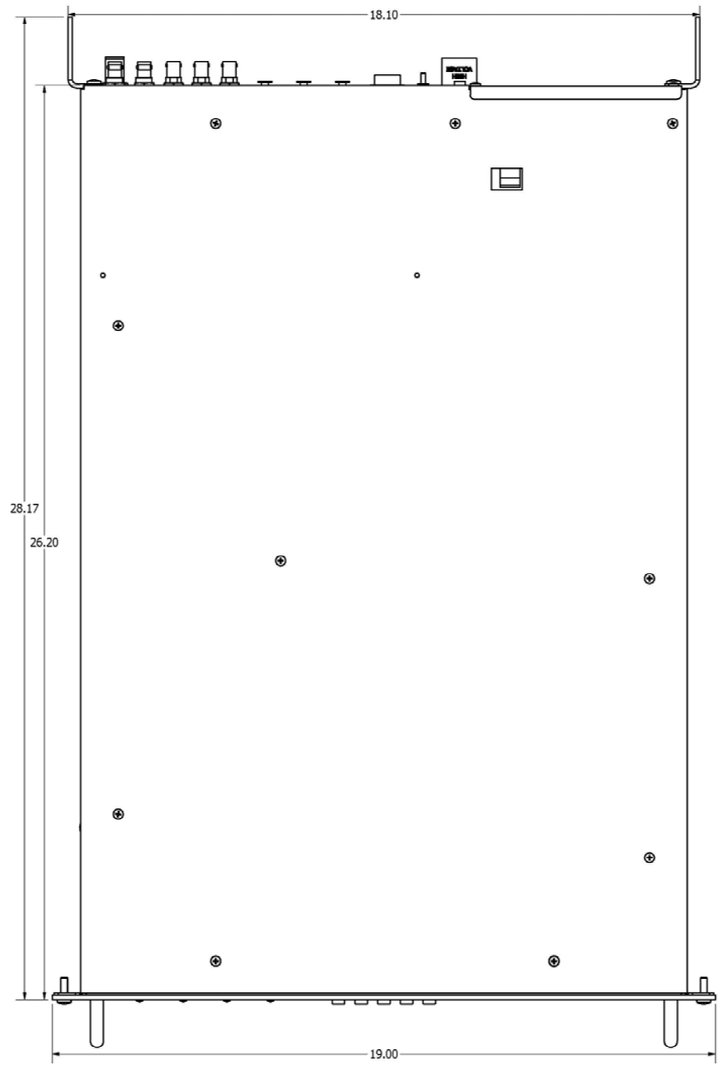

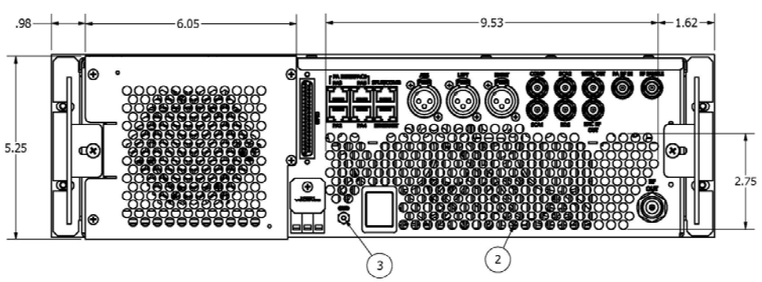

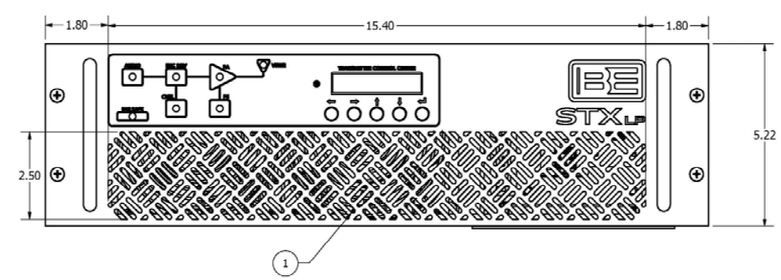

NOTES

1. AIR INLET AT FRONT OF TRANSMITTER.
2. AIR OUTLET AT REAR OF TRANSMITTER.
3. GROUND LUG.
4. OUTPUT RF CONNECTION – TYPE 'N'.
5. WEIGHT – 40 LBS (18.2 kg).
6. UNPACKED CUBAGE – 1.5 FT^3 (0.04 m^3).
7. AC POWER INPUT – 180V TO 260V AC 47 TO 63 Hz.
8. AC LINE CURRENT – 20 Amps MAX.
9. PRIMARY AC DISCONNECT –
   FUSE/CIRCUIT BREAKER – 20 Amps.
   WIRE SIZE – 12 AWG TYPE THHN.
10. POWER CONSUMPTION – 1.75 kW (CALCULATED).
11. COOLING REQUIREMENTS – 200 CFM (5.6 m^3/min).
12. HEAT DISSIPATION – 750W AT 1 kW RF OUTPUT INTO A 50 OHM LOAD.
13. BTU – 2560 BTU/H AT 1 kW RF OUTPUT INTO A 50 OHM LOAD.
14. POWER FACTOR – GREATER THAN 0.98.

STXLP 1 kW INSTALLATION DIAGRAM – 597-4102-4

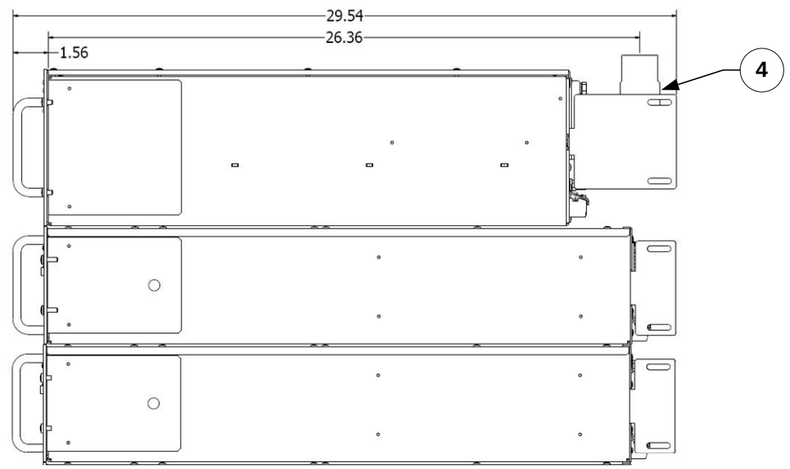

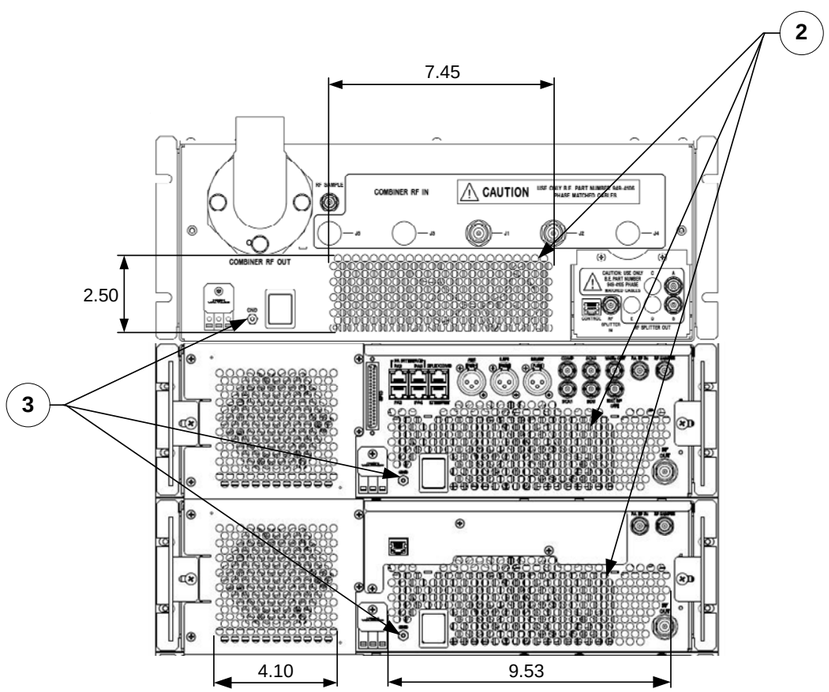

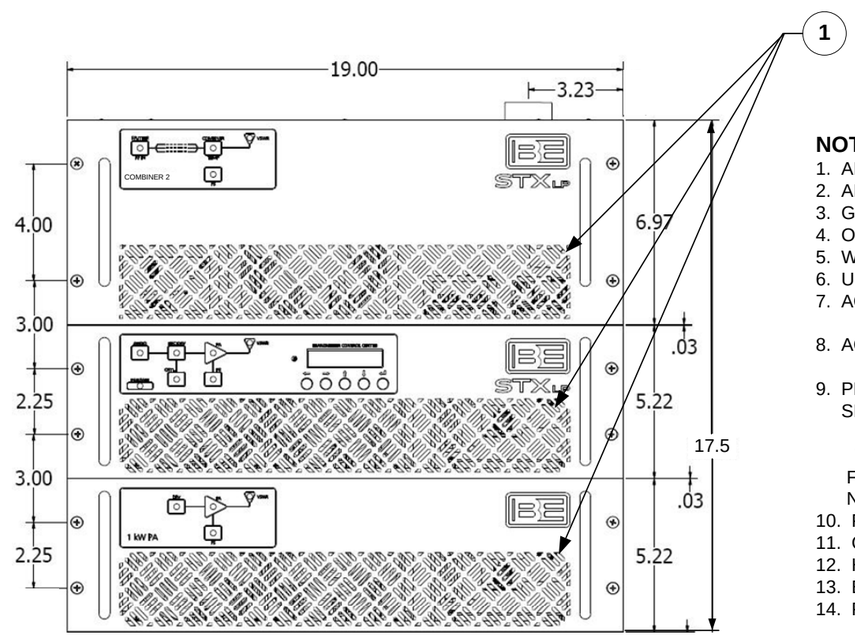

NOTES

1. AIR INLET AT FRONT OF TRANSMITTER.
2. AIR OUTLET AT REAR OF TRANSMITTER.
3. GROUND LUG.
4. OUTPUT RF CONNECTION – 1 5/8" Hard Line Coax
5. WEIGHT – 130 LBS (59.0 kg).
6. UNPACKED CUBAGE – 5.7 FT^3 (0.16 m^3).
7. AC POWER INPUT -
   180V TO 260V AC 47 TO 63 Hz SINGLE PHASE.
8. AC LINE CURRENT –
   32 Amps MAX SINGLE PHASE.
9. PRIMARY AC DISCONNECT -
   SINGLE PHASE–
   FUSE/CIRCUIT BREAKER – 40 Amps.
   WIRE SIZE – #8 AWG TYPE THHN.
   FOR PROPER FUSE/CIRCUIT BREAKER SIZE, REFER TO NATIONAL ELECTRIC CODES AND LOCAL CODES.
10. POWER CONSUMPTION – 3.5 kW (CALCULATED).
11. COOLING REQUIREMENTS – 600 CFM (17.0 m^3/min).
12. HEAT DISSIPATION – 1550W AT 2 kW RF OUTPUT INTO A 50 OHM LOAD.
13. BTU – 5295 BTU/H AT 2 kW RF OUTPUT INTO A 50 OHM LOAD.
14. POWER FACTOR – GREATER THAN 0.98.

STXLP 2 kW INSTALLATION DIAGRAM –
597-4102-37

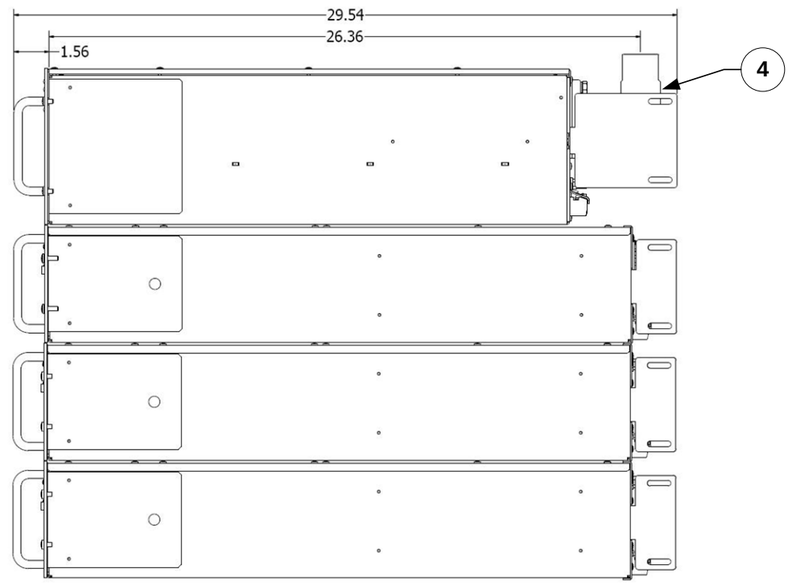

VIEW A-A

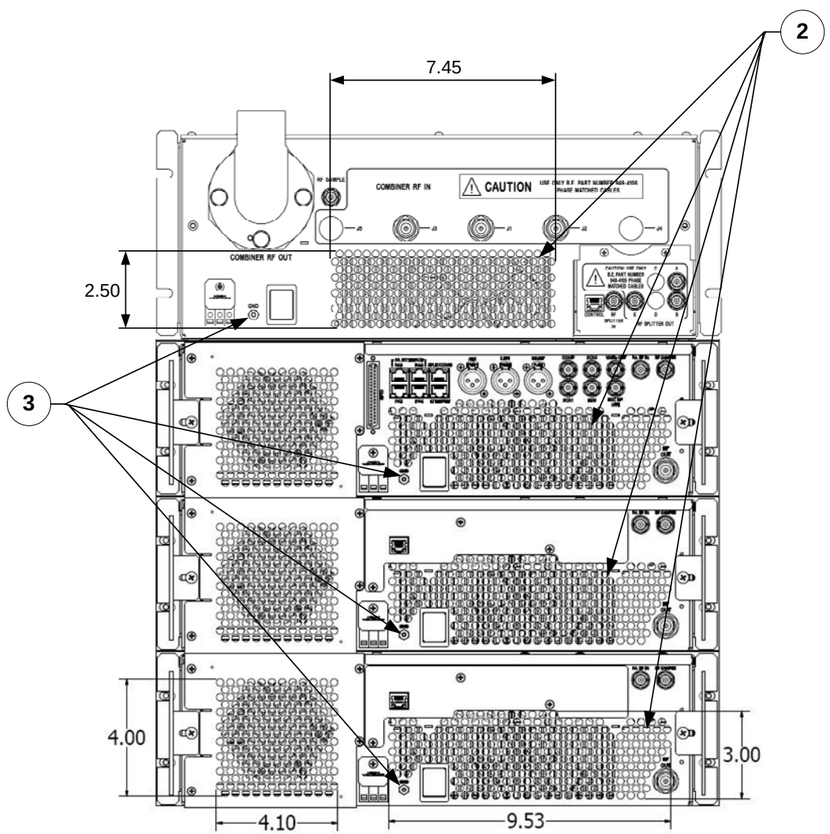

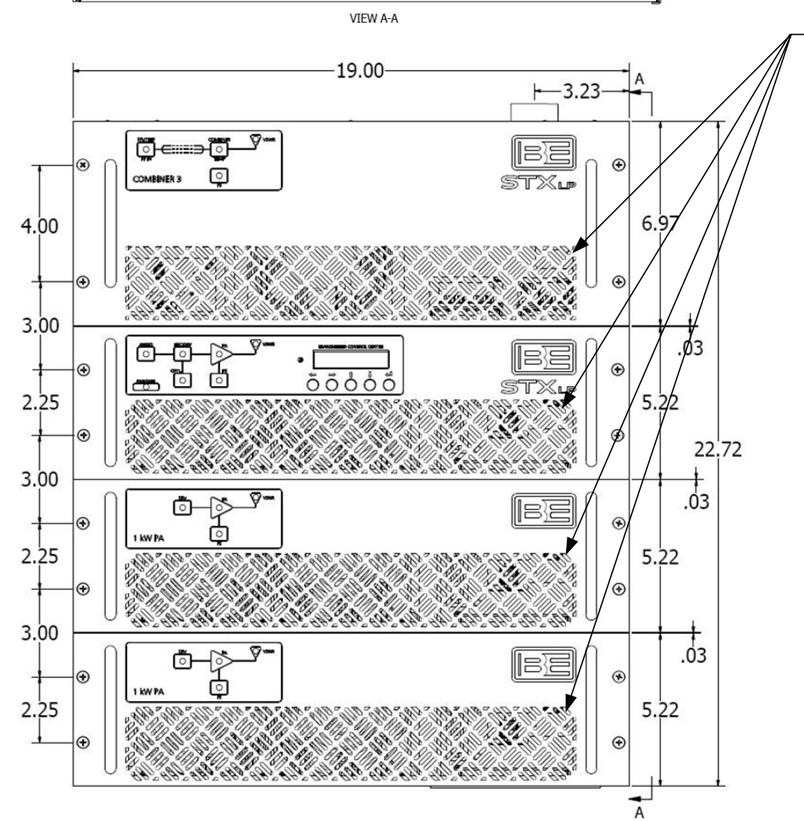

NOTES

1. AIR INLET AT FRONT OF TRANSMITTER.
2. AIR OUTLET AT REAR OF TRANSMITTER.
3. GROUND LUG.
4. OUTPUT RF CONNECTION – 1 5/8" Hard Line Coax
5. WEIGHT – 170 LBS (77.1 kg).
6. UNPACKED CUBAGE – 7.4 FT^3 (0.21 m^3).
7. AC POWER INPUT -
   180V TO 260V AC 47 TO 63 Hz SINGLE PHASE.
   180V TO 260V AC DELTA OR 311V TO 449V AC WYE
   47 TO 63 Hz THREE PHASE
8. AC LINE CURRENT –
   48 Amps MAX SINGLE PHASE.
   28 Amps MAX THREE PHASE.
9. PRIMARY AC DISCONNECT -
   SINGLE PHASE–
   FUSE/CIRCUIT BREAKER – 60 Amps.
   WIRE SIZE – #4 AWG TYPE THHN.
   THREE PHASE –
   FUSE/CIRCUIT BREAKER – 30 Amps.
   WIRE SIZE – #10 AWG TYPE THHN.
   FOR PROPER FUSE/CIRCUIT BREAKER SIZE, REFER TO NATIONAL ELECTRIC CODES AND LOCAL CODES.
10. POWER CONSUMPTION – 5.3 kW (CALCULATED).
11. COOLING REQUIREMENTS – 800 CFM (22.7 m^3/min).
12. HEAT DISSIPATION – 2300W AT 3 kW RF OUTPUT INTO A 50 OHM LOAD.
13. BTU – 7850 BTU/H AT 3 kW RF OUTPUT INTO A 50 OHM LOAD.
14. POWER FACTOR – GREATER THAN 0.98.

STXLP 3 kW INSTALLATION DIAGRAM – 597-4102-7

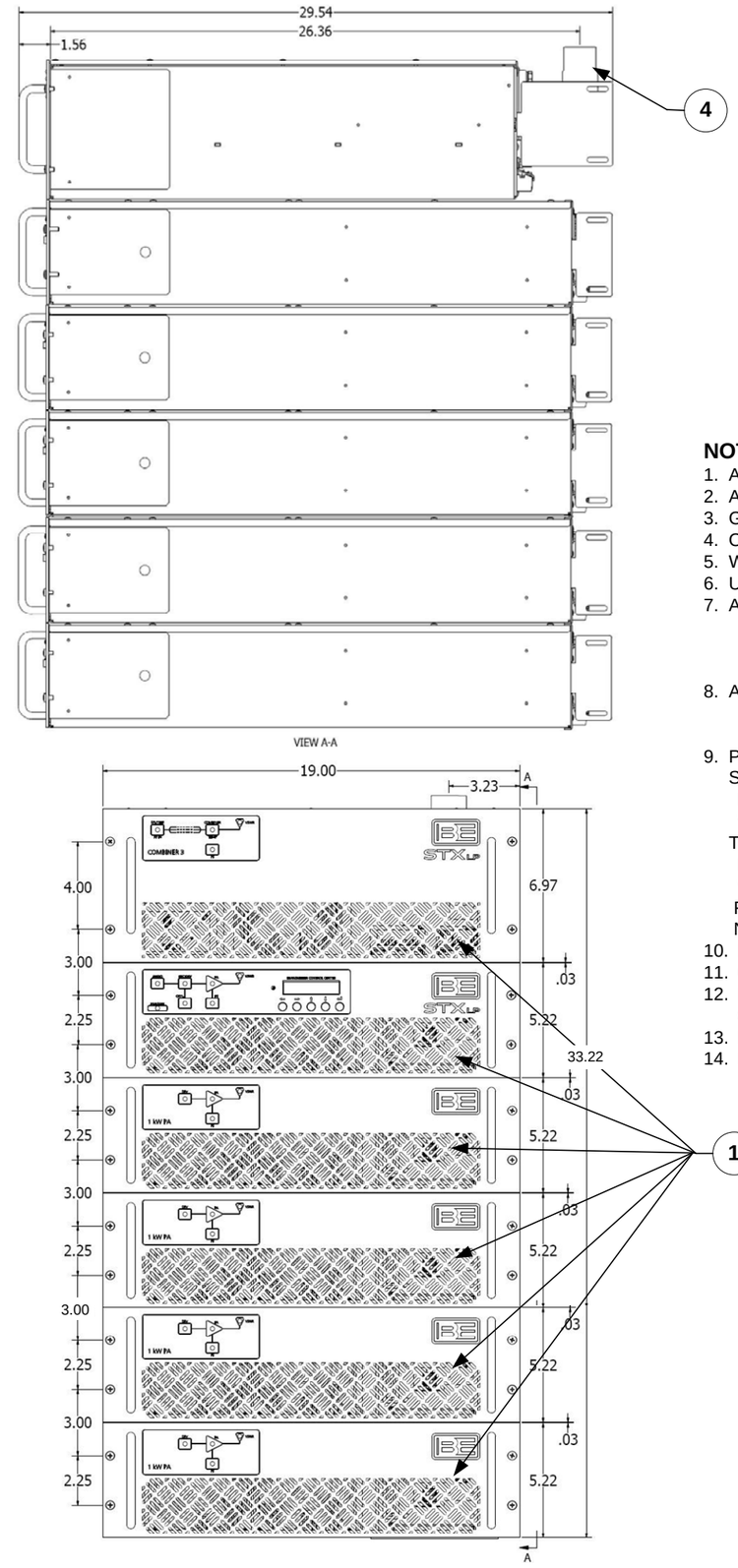

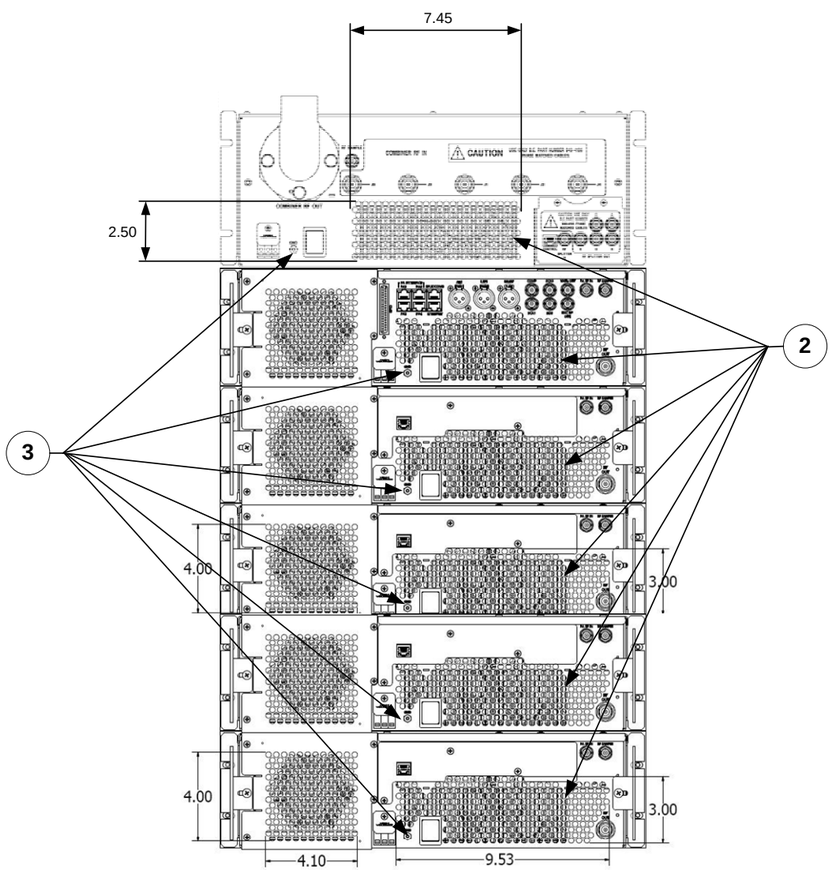

NOTES

1. AIR INLET AT FRONT OF TRANSMITTER.
2. AIR OUTLET AT REAR OF TRANSMITTER.
3. GROUND LUG.
4. OUTPUT RF CONNECTION – 1 5/8" Hard Line Coax
5. WEIGHT – 250 LBS (113.4 kg).
6. UNPACKED CUBAGE – 10.8 FT^3 (0.31 m^3).
7. AC POWER INPUT –
   180V TO 260V AC 47 TO 63 Hz SINGLE PHASE.
   180V TO 260V AC DELTA OR 311V TO 449V AC WYE
   47 TO 63 Hz THREE PHASE
8. AC LINE CURRENT –
   80 Amps MAX SINGLE PHASE.
   47 Amps MAX THREE PHASE.
9. PRIMARY AC DISCONNECT -
   SINGLE PHASE –
   FUSE/CIRCUIT BREAKER – 100 Amps.
   WIRE SIZE – #2 AWG TYPE THHN.
   THREE PHASE –
   FUSE/CIRCUIT BREAKER – 60 Amps.
   WIRE SIZE – #4 AWG TYPE THHN.
   FOR PROPER FUSE/CIRCUIT BREAKER SIZE, REFER TO NATIONAL ELECTRIC CODES AND LOCAL CODES.
10. POWER CONSUMPTION – 8.8 kW (CALCULATED).
11. COOLING REQUIREMENTS – 1200 CFM (34.0 m^3/min).
12. HEAT DISSIPATION – 3800W AT 5 kW RF OUTPUT INTO A 50 OHM LOAD.
13. BTU – 13000 BTU/H AT 5 kW RF OUTPUT INTO A 50 OHM LOAD.
14. POWER FACTOR – GREATER THAN 0.98.

STXLP 5 kW INSTALLATION DIAGRAM – 597-4102-15

ACCEPTABLE THREE PHASE AC INPUT CONFIGURATIONS.

The STXLP 3kW and 5kW transmitters can be operated from a three-phase power supply if desired. If the transmitter is to be operated from a three phase power supply, the transmitter must be connected to a closed-delta or wye connected three-phase power source. Operation from an unsatisfactory power source will void the warranty on the transmitter as any resultant damage is beyond the control of the manufacturer. Before attempting installation of the transmitter, assure that the proper power source is installed.

An open-delta, V to V, T to T, T to L, or Scott connected power source will provide unsatisfactory transmitter performance as transients and unstable power can damage components of the transmitter and provide degraded specifications. Any of these systems will develop a considerable imbalance between phases in voltage, phase angle, or both voltage and phase angle. These problems can result in premature failure of power supply and RF circuit components.

It is important that the local electric utility be consulted to ensure that the correct service is provided before connection of the transmitter to a primary power source. The proper power source can be readily identified by the use of three transformers with one winding each or one transformer with three windings instead of the use of two transformers as required for the unacceptable configurations.

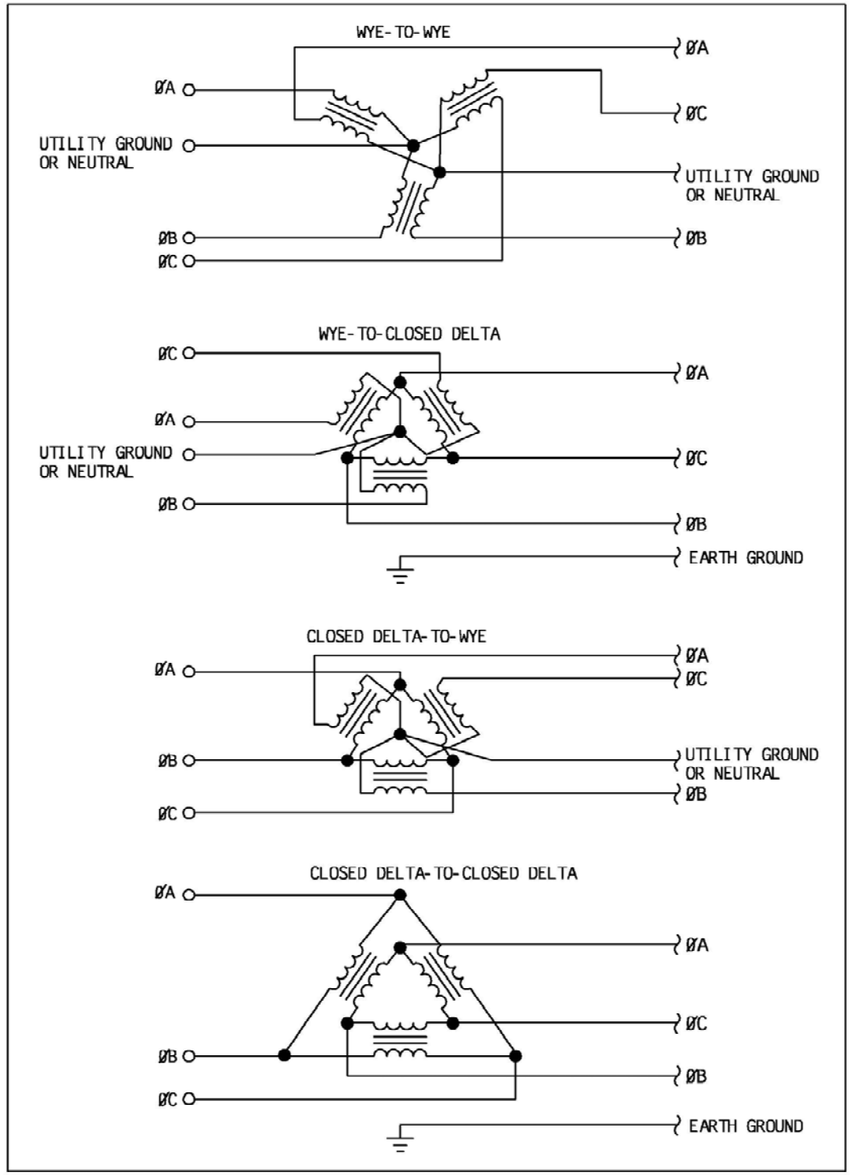

STXLP – MAIN THREE PHASE POWER SUPPLY –
SHEET 1 OF 2
597-4102-29

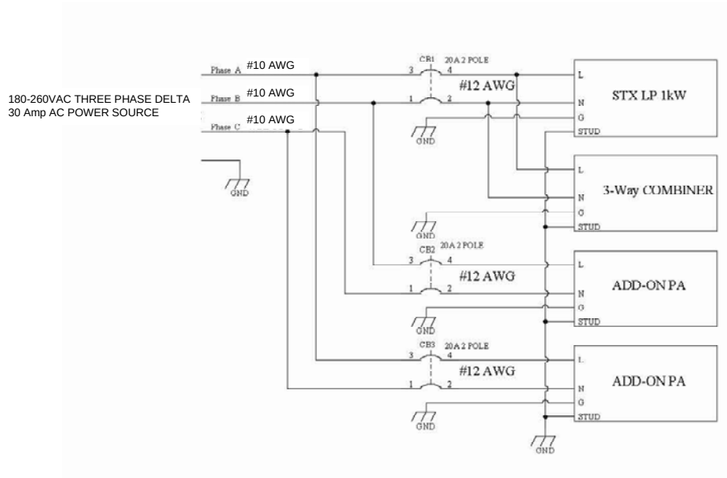

STXLP 3KW THREE PHASE DELTA

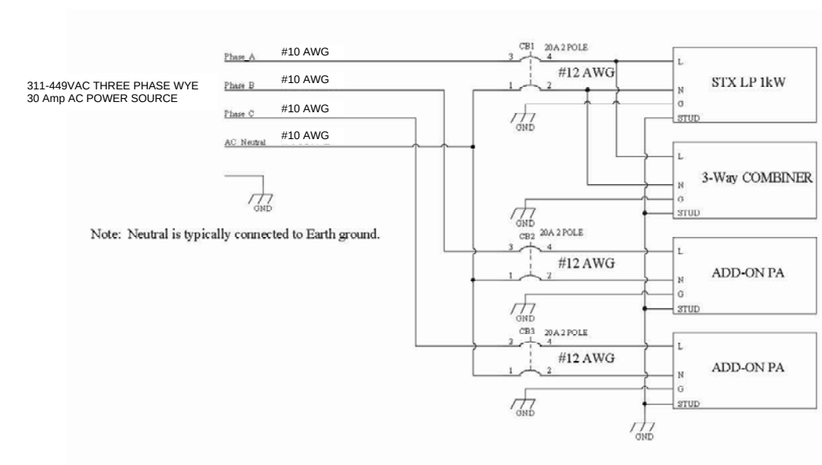

STXLP 3KW THREE PHASE WYE

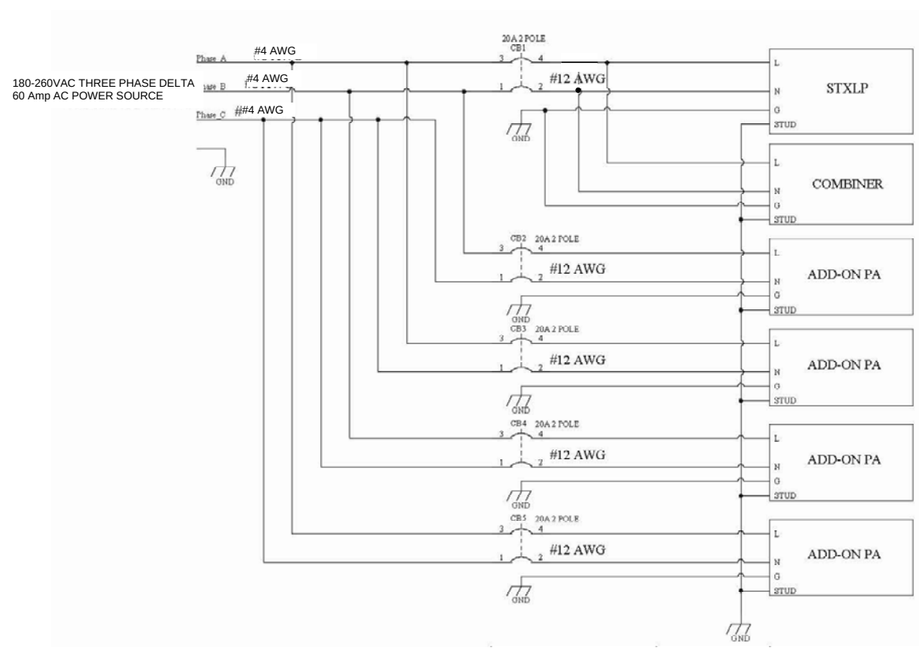

STXLP 5KW THREE PHASE DELTA

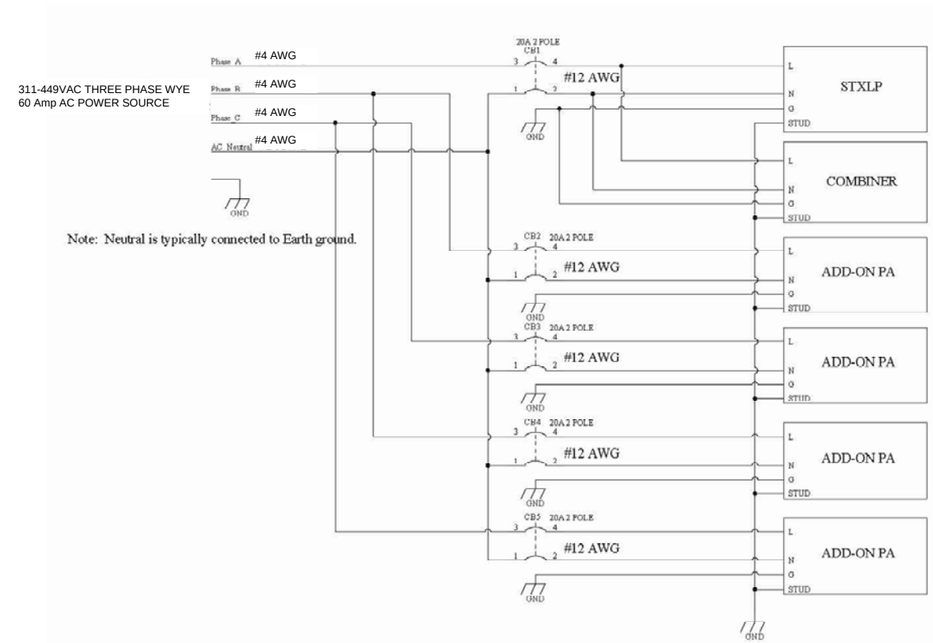

STXLP 5KW THREE PHASE WYE

NOTES –
FOR PROPER FUSE/CIRCUIT BREAKER SIZE, REFER TO
NATIONAL ELECTRIC CODES AND LOCAL CODES.

STXLP – MAIN THREE PHASE POWER SUPPLY – SHEET 2 OF 2
597-4102-30

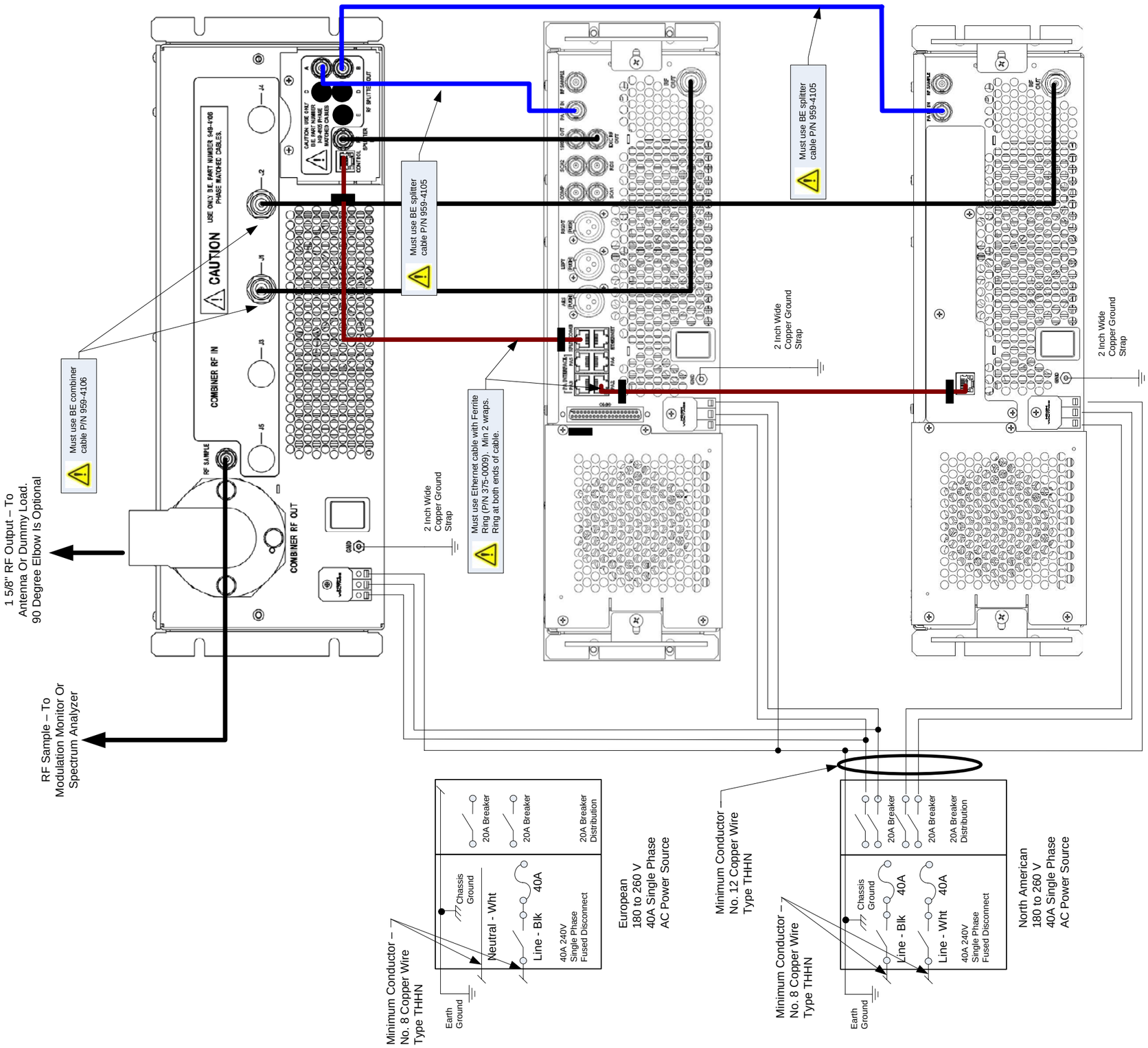

STXLP 2 kW CONNECTION DIAGRAM 597-4102-35

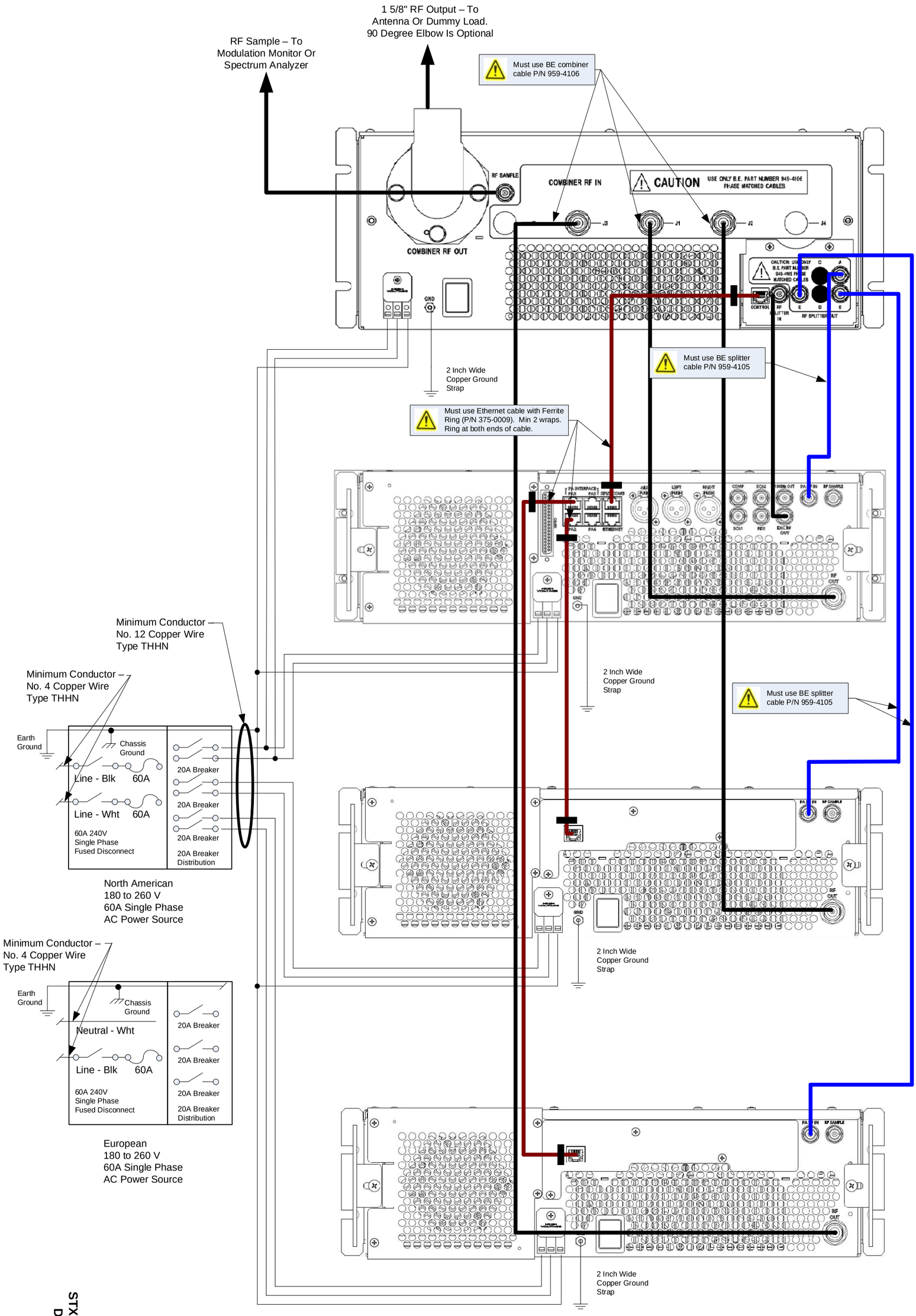

STXLP 3 kW CONNECTION
DIAGRAM 597-4102-5

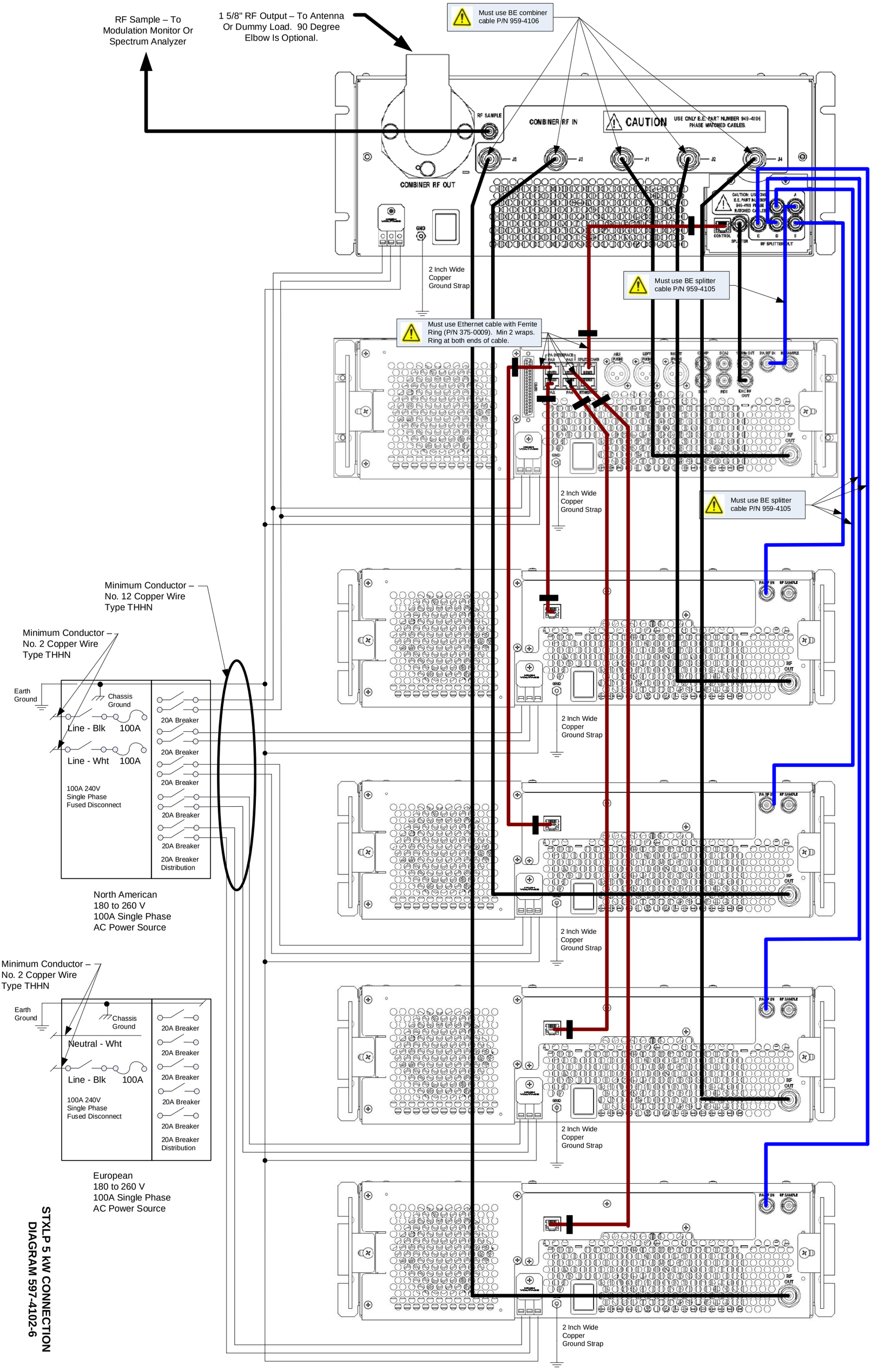

STXLP 5 kW CONNECTION DIAGRAM 597-4102-6

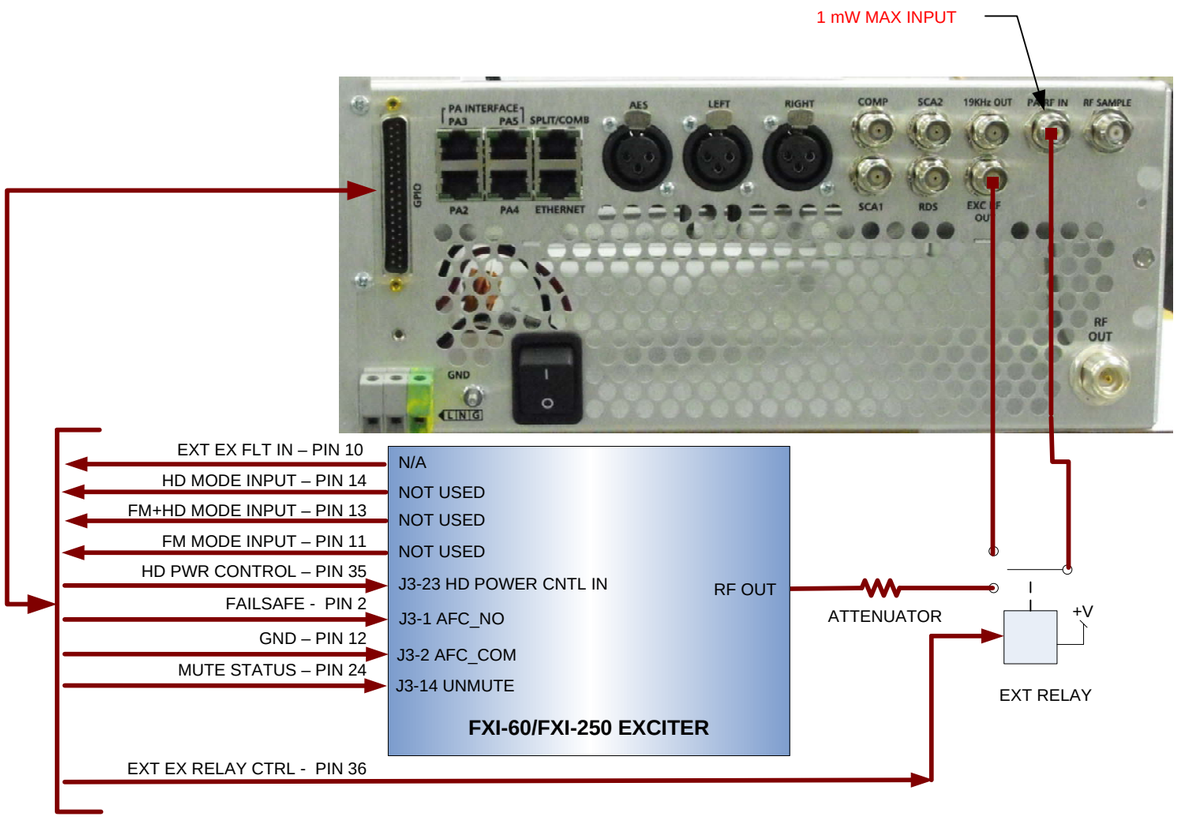

HD CONNECTIONS

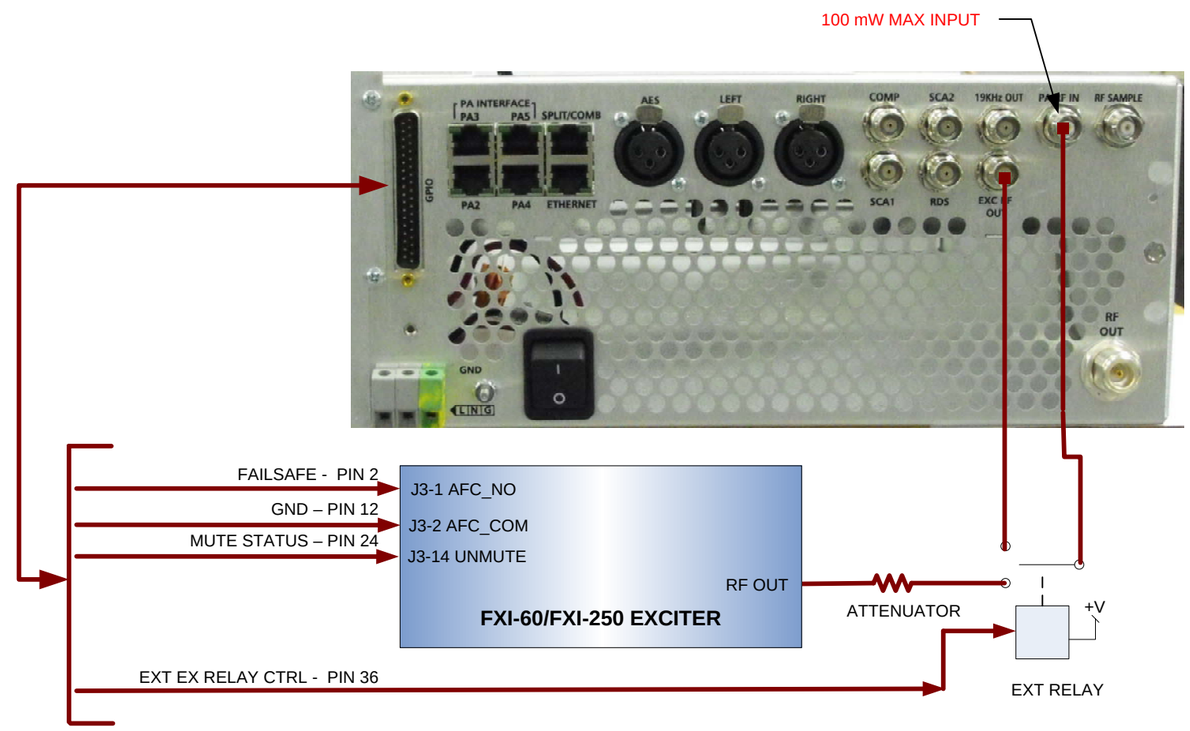

FM ONLY CONNECTIONS

BEI FXI-60/FXI-250 TO STXLP CONNECTIONS
597-4102-14

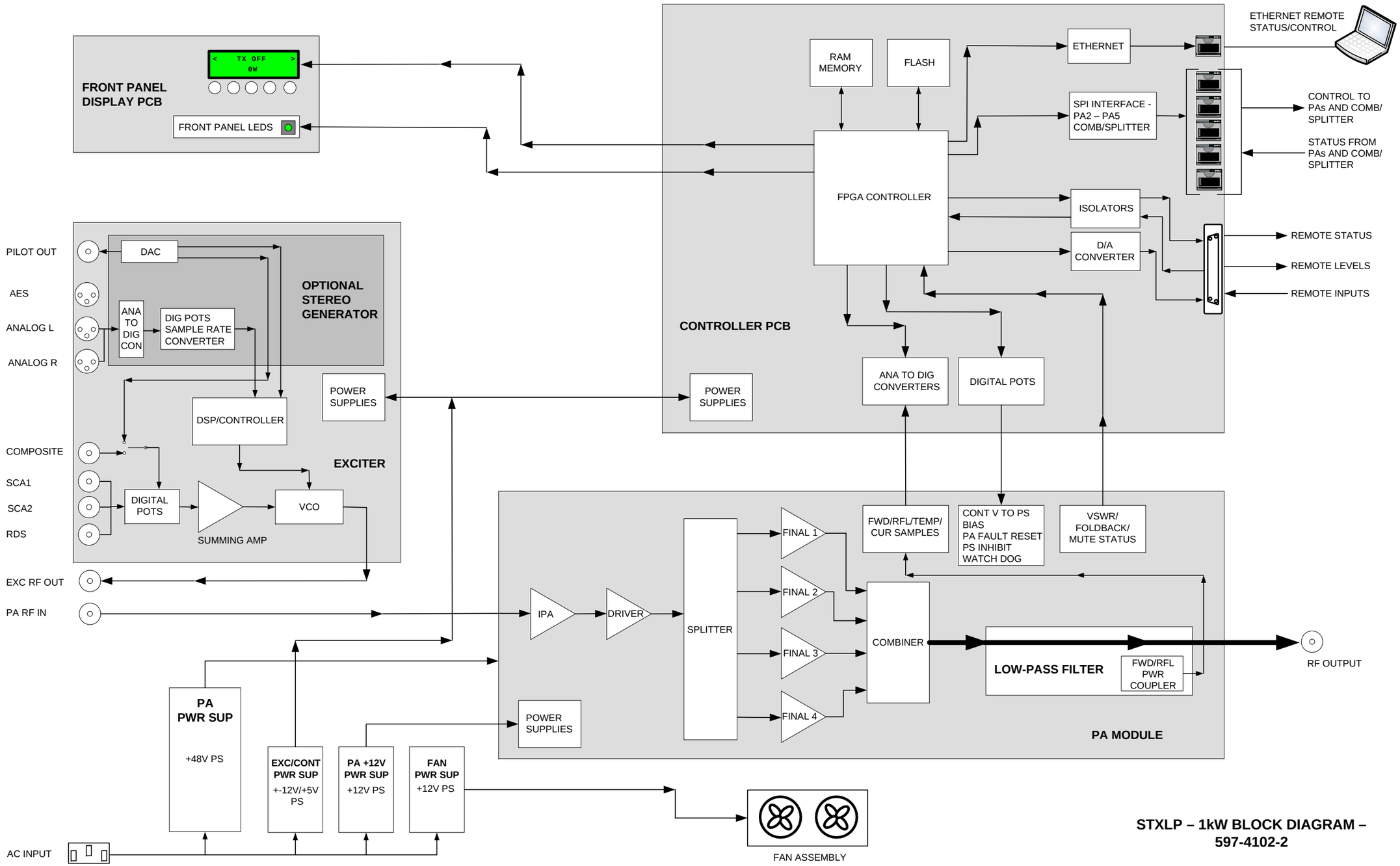

STXLP – 1kW BLOCK DIAGRAM – 597-4102-2

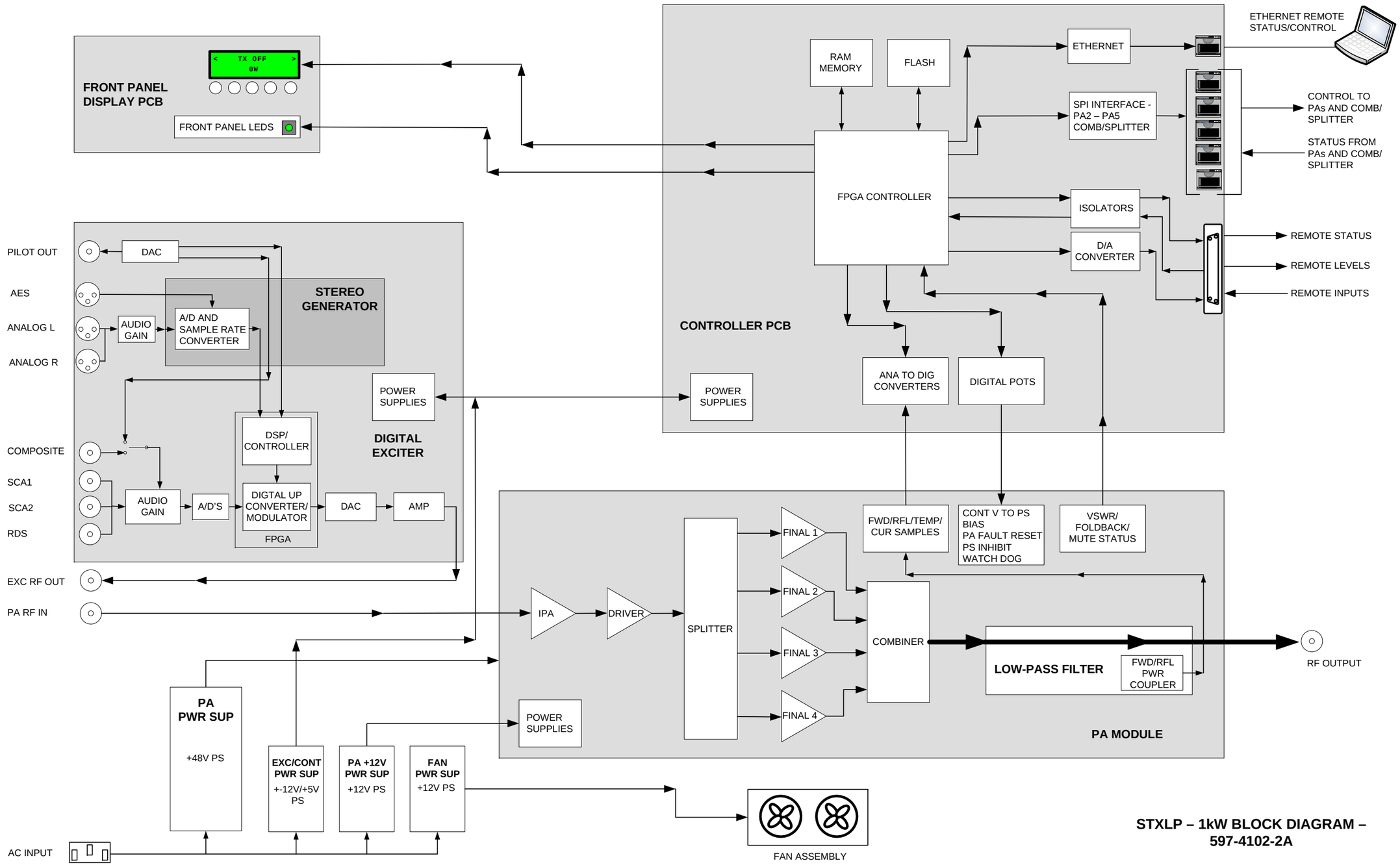

STXLP – 1kW BLOCK DIAGRAM – 597-4102-2A

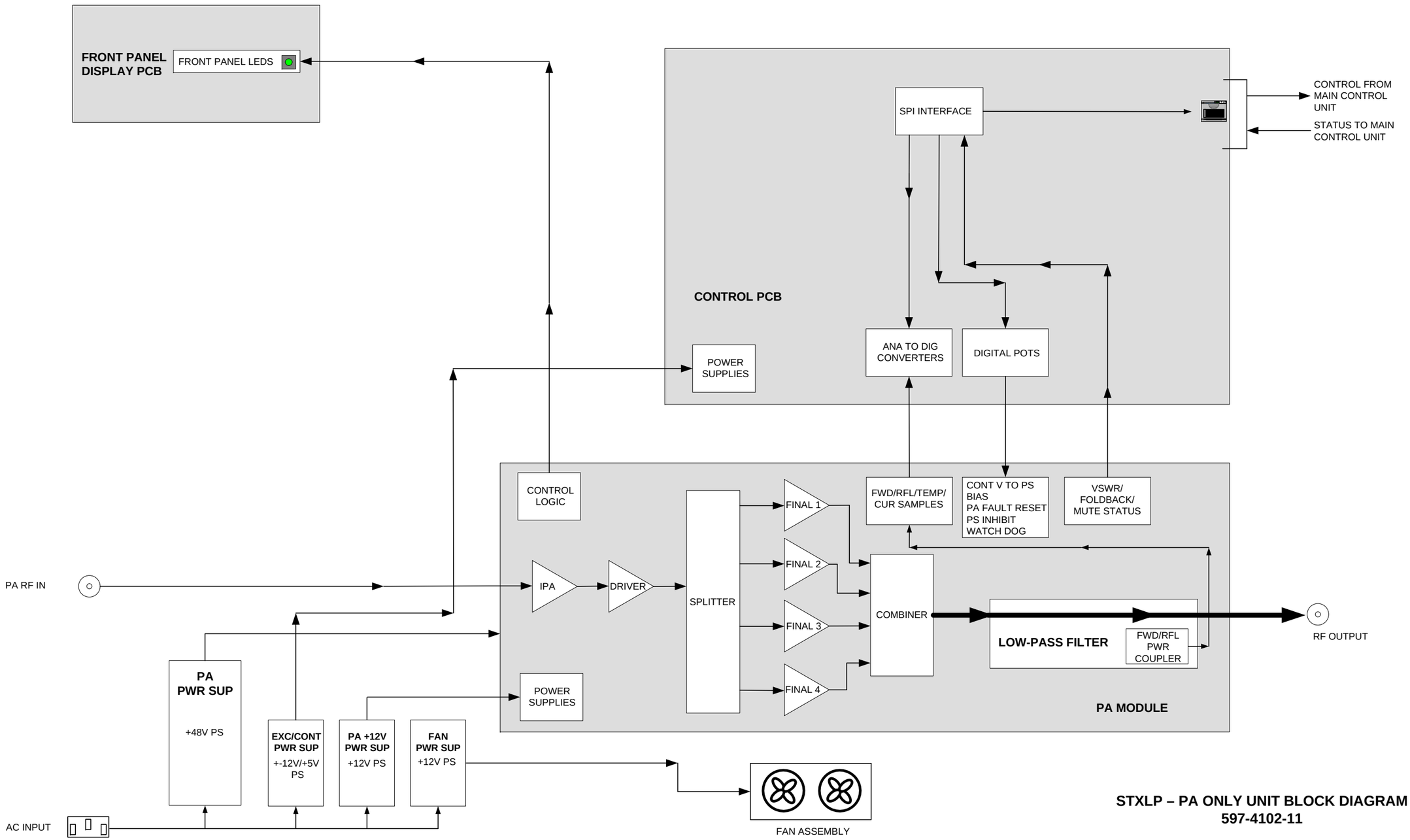

STXLP – PA ONLY UNIT BLOCK DIAGRAM
597-4102-11

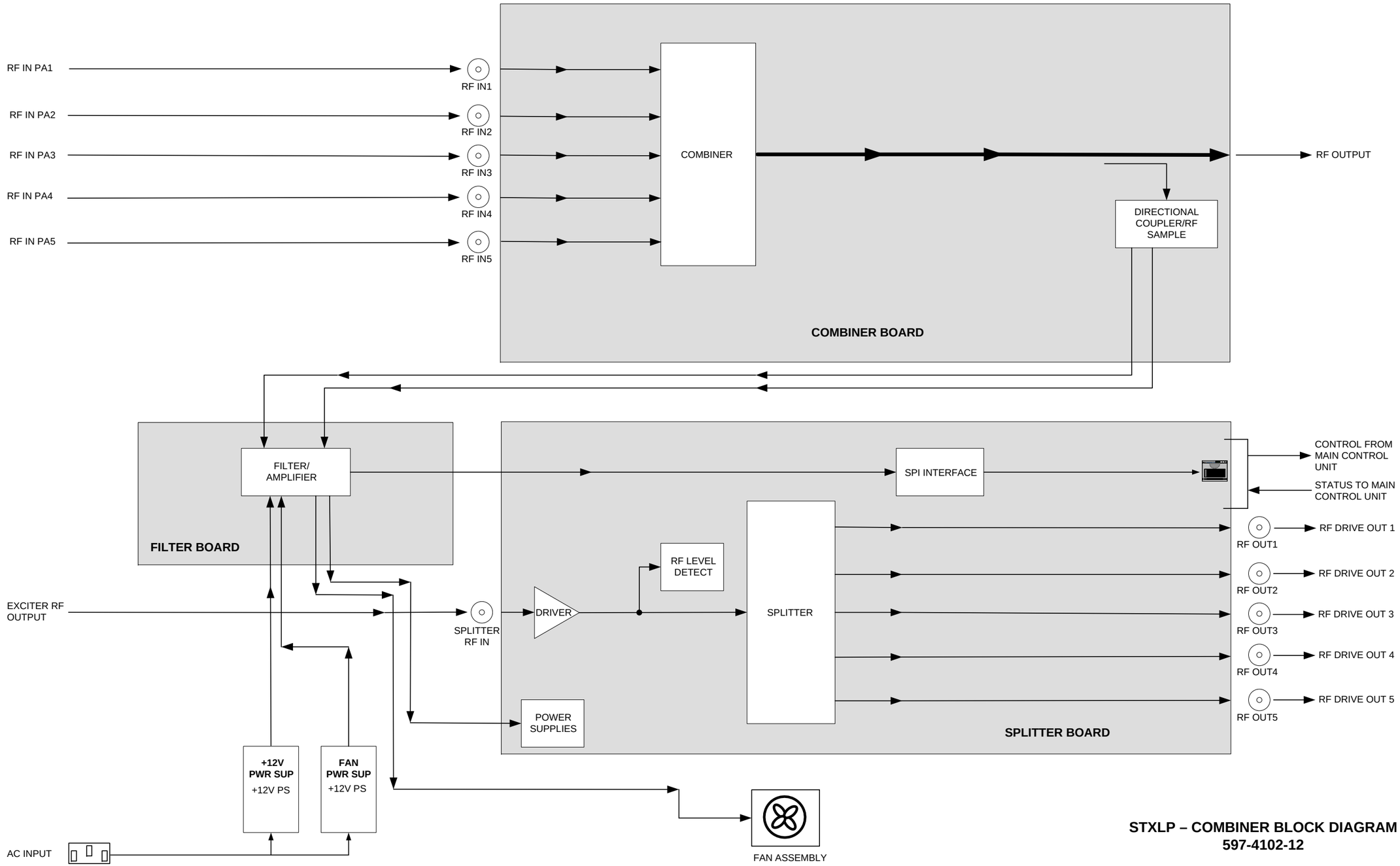

STXLP – COMBINER BLOCK DIAGRAM
597-4102-12

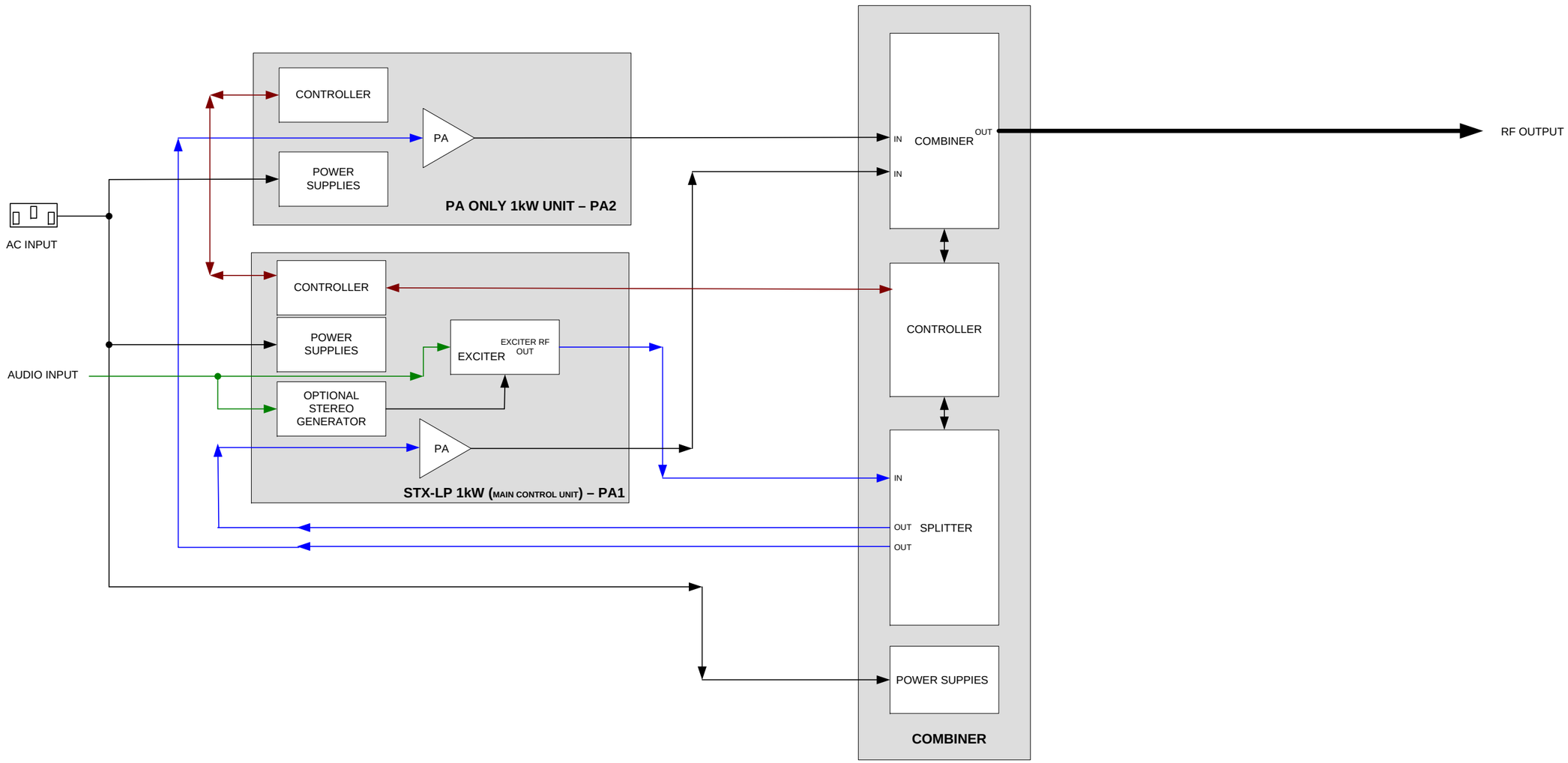

STXLP – 2kW BLOCK DIAGRAM – 597-4102-42

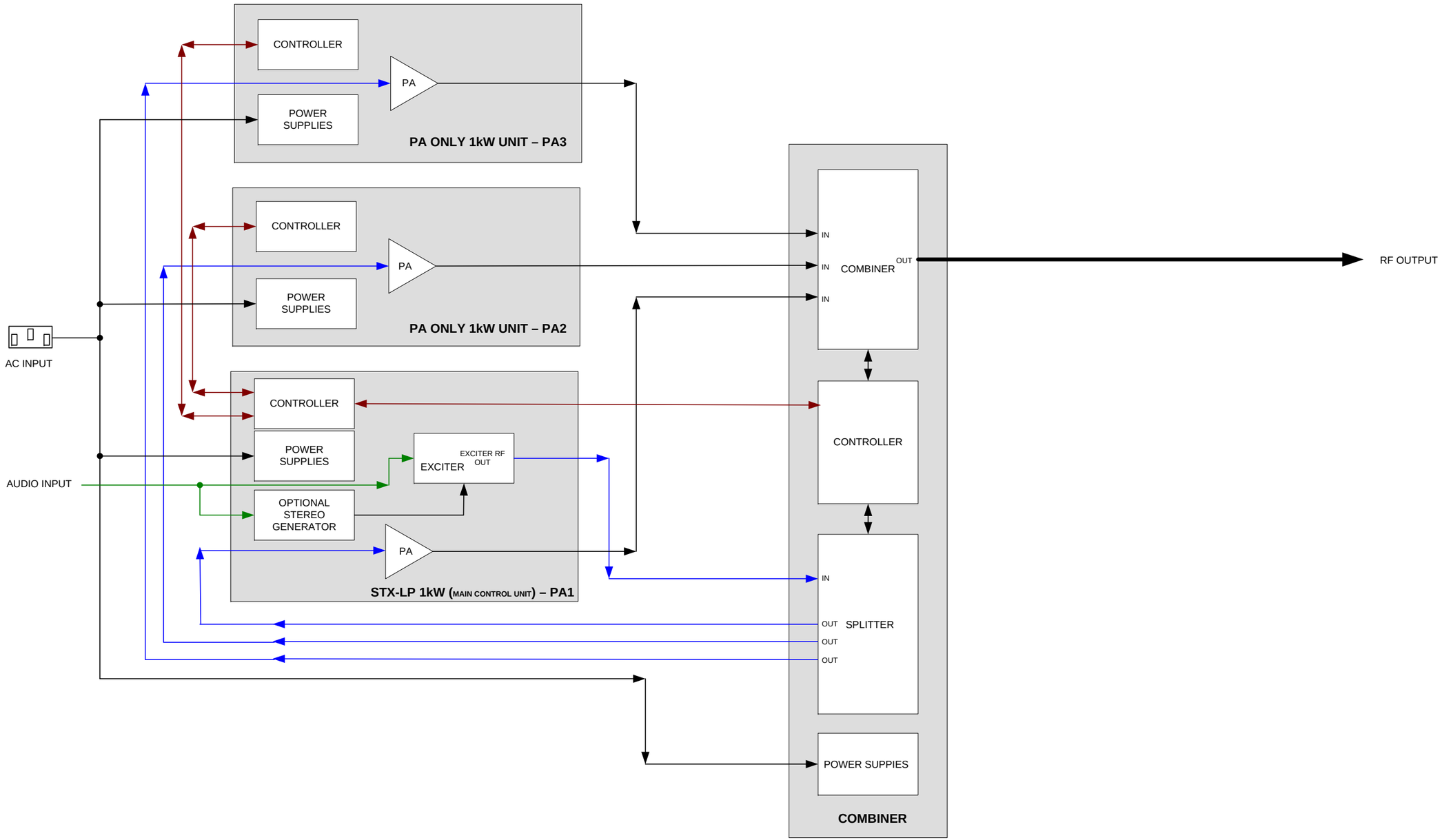

STXLP – 3kW BLOCK DIAGRAM – 597-4102-13

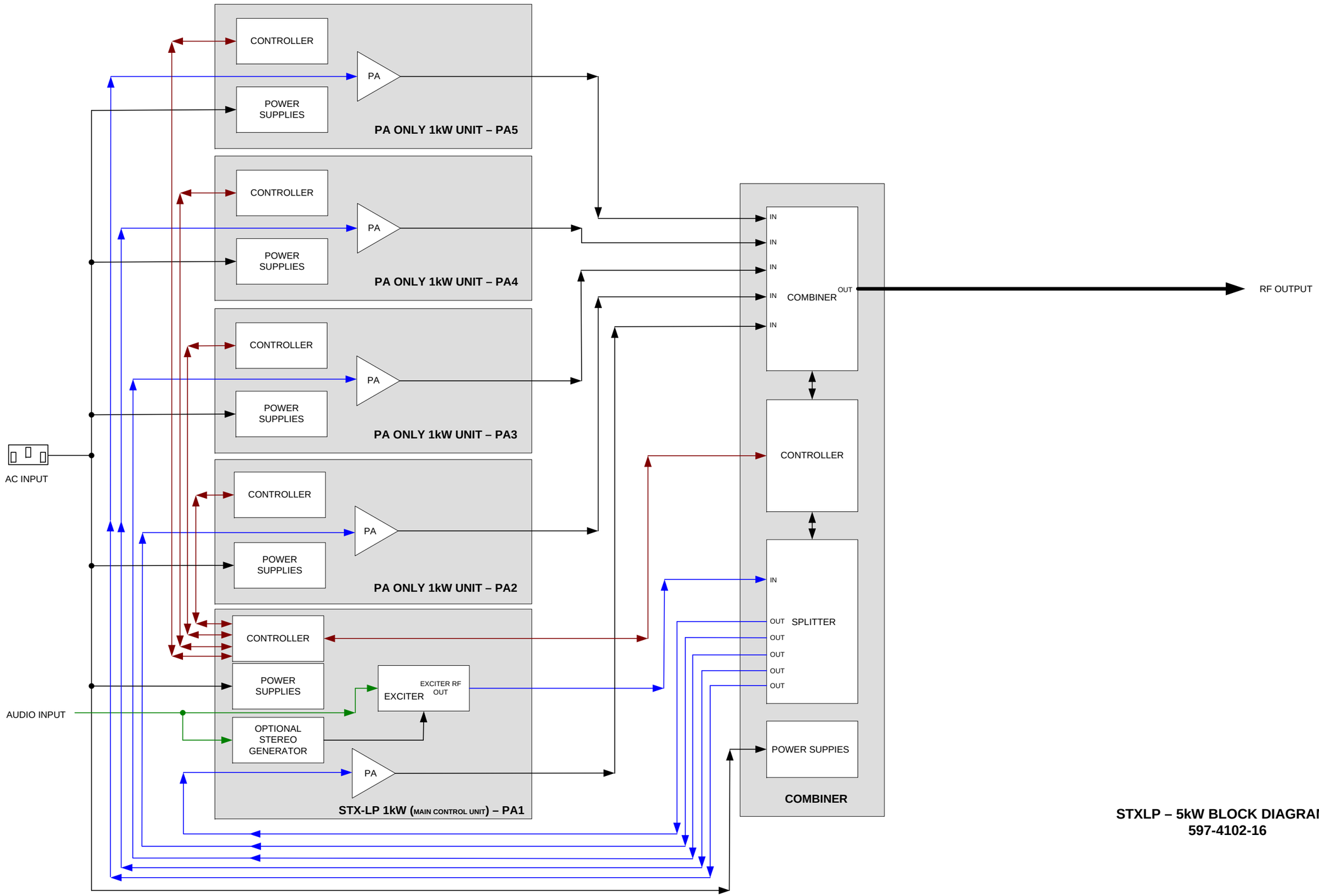

STXLP – 5kW BLOCK DIAGRAM – 597-4102-16

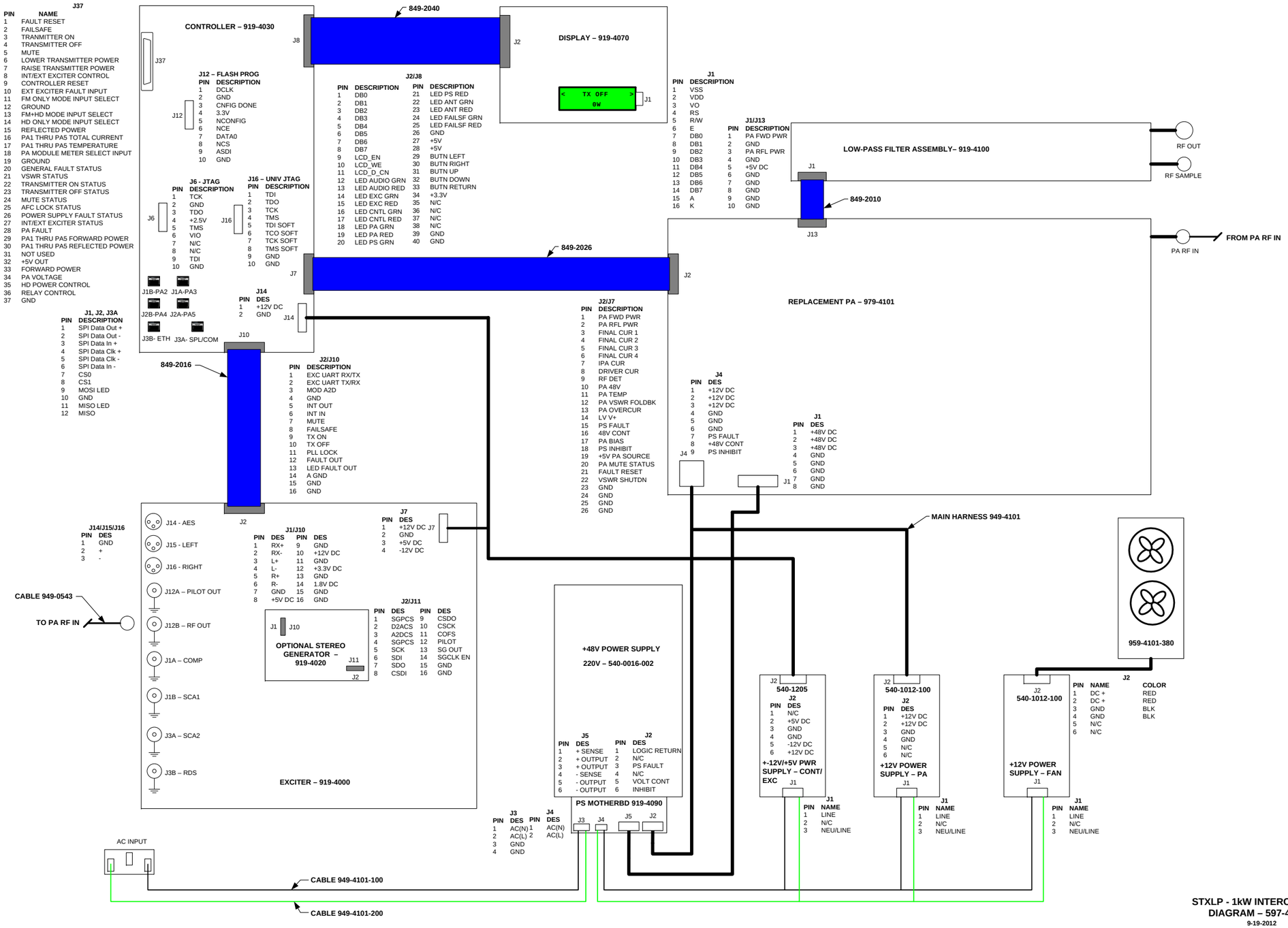

J37

PIN	NAME
1	FAULT RESET
2	FAILSAFE
3	TRANMITTER ON
4	TRANSMITTER OFF
5	MUTE
6	LOWER TRANSMITTER POWER
7	RAISE TRANSMITTER POWER
8	INT/EXT EXCITER CONTROL
9	CONTROLLER RESET
10	EXT EXCITER FAULT INPUT
11	FM ONLY MODE INPUT SELECT
12	GROUND
13	FM+HD MODE INPUT SELECT
14	HD ONLY MODE INPUT SELECT
15	REFLECTED POWER
16	PA1 THRU PA5 TOTAL CURRENT
17	PA1 THRU PA5 TEMPERATURE
18	PA MODULE METER SELECT INPUT
19	GROUND
20	GENERAL FAULT STATUS
21	VSWR STATUS
22	TRANSMITTER ON STATUS
23	TRANSMITTER OFF STATUS
24	MUTE STATUS
25	AFC LOCK STATUS
26	POWER SUPPLY FAULT STATUS
27	INT/EXT EXCITER STATUS
28	PA FAULT
29	PA1 THRU PA5 FORWARD POWER
30	PA1 THRU PA5 REFLECTED POWER
31	NOT USED
32	+5V OUT
33	FORWARD POWER
34	PA VOLTAGE
35	HD POWER CONTROL
36	RELAY CONTROL
37	GND

J1, J2, J3A

PIN	DESCRIPTION
1	SPI Data Out +
2	SPI Data Out -
3	SPI Data In +
4	SPI Data Clk +
5	SPI Data Clk -
6	SPI Data In -
7	CS0
8	CS1
9	MOSI LED
10	GND
11	MISO LED
12	MISO

J12 – FLASH PROG

PIN	DESCRIPTION
1	DCLK
2	GND
3	CNFIG DONE
4	3.3V
5	NCONFIG
6	NCE
7	DATA0
8	NCS
9	ASDI
10	GND

J6 - JTAG

PIN	DESCRIPTION
1	TCK
2	GND
3	TDO
4	+2.5V
5	TMS
6	VIO
7	N/C
8	N/C
9	TDI
10	GND

J16 – UNIV JTAG

PIN	DESCRIPTION
1	TDI
2	TDO
3	TCK
4	TMS
5	TDI SOFT
6	TCO SOFT
7	TCK SOFT
8	TMS SOFT
9	GND
10	GND

J14

PIN	DES
1	+12V DC
2	GND

J2/J8

PIN	DESCRIPTION	PIN	DESCRIPTION
1	DB0	21	LED PS RED
2	DB1	22	LED ANT GRN
3	DB2	23	LED ANT RED
4	DB3	24	LED FAILSF GRN
5	DB4	25	LED FAILSF RED
6	DB5	26	GND
7	DB6	27	+5V
8	DB7	28	+5V
9	LCD_EN	29	BUTN LEFT
10	LCD_WE	30	BUTN RIGHT
11	LCD_D_CN	31	BUTN UP
12	LED AUDIO GRN	32	BUTN DOWN
13	LED AUDIO RED	33	BUTN RETURN
14	LED EXC GRN	34	+3.3V
15	LED EXC RED	35	N/C
16	LED CNTL GRN	36	N/C
17	LED CNTL RED	37	N/C
18	LED PA GRN	38	N/C
19	LED PA RED	39	GND
20	LED PS GRN	40	GND

J1

PIN	DESCRIPTION
1	VSS
2	VDD
3	VO
4	RS
5	R/W
6	E
7	DB0
8	DB1
9	DB2
10	DB3
11	DB4
12	DB5
13	DB6
14	DB7
15	A
16	K

J1/J13

PIN	DESCRIPTION
1	PA FWD PWR
2	GND
3	PA RFL PWR
4	GND
5	+5V DC
6	GND
7	GND
8	GND
9	GND
10	GND

J2/J7

PIN	DESCRIPTION
1	PA FWD PWR
2	PA RFL PWR
3	FINAL CUR 1
4	FINAL CUR 2
5	FINAL CUR 3
6	FINAL CUR 4
7	IPA CUR
8	DRIVER CUR
9	RF DET
10	PA 48V
11	PA TEMP
12	PA VSWR FOLDBK
13	PA OVERCUR
14	LV V+
15	PS FAULT
16	48V CONT
17	PA BIAS
18	PS INHIBIT
19	+5V PA SOURCE
20	PA MUTE STATUS
21	FAULT RESET
22	VSWR SHUTDN
23	GND
24	GND
25	GND
26	GND

J4

PIN	DES
1	+12V DC
2	+12V DC
3	+12V DC
4	GND
5	GND
6	GND
7	PS FAULT
8	+48V CONT
9	PS INHIBIT

J1

PIN	DES
1	+48V DC
2	+48V DC
3	+48V DC
4	GND
5	GND
6	GND
7	GND
8	GND

J2/J10

PIN	DESCRIPTION
1	EXC UART RX/TX
2	EXC UART TX/RX
3	MOD A2D
4	GND
5	INT OUT
6	INT IN
7	MUTE
8	FAILSAFE
9	TX ON
10	TX OFF
11	PLL LOCK
12	FAULT OUT
13	LED FAULT OUT
14	A GND
15	GND
16	GND

J7

PIN	DES
1	+12V DC
2	GND
3	+5V DC
4	-12V DC

J14/J15/J16

PIN	DES
1	GND
2	+
3	-

J1/J10

PIN	DES	PIN	DES
1	RX+	9	GND
2	RX-	10	+12V DC
3	L+	11	GND
4	L-	12	+3.3V DC
5	R+	13	GND
6	R-	14	1.8V DC
7	GND	15	GND
8	+5V DC	16	GND

J2/J11

PIN	DES	PIN	DES
1	SGPCS	9	CSDO
2	D2ACS	10	CSCK
3	A2DCS	11	COFS
4	SGPCS	12	PILOT
5	SCK	13	SG OUT
6	SDI	14	SGCLK EN
7	SDO	15	GND
8	CSDI	16	GND

J5

PIN	DES
1	+ SENSE
2	+ OUTPUT
3	+ OUTPUT
4	- SENSE
5	- OUTPUT
6	- OUTPUT

J2

PIN	DES
1	LOGIC RETURN
2	N/C
3	PS FAULT
4	N/C
5	VOLT CONT
6	INHIBIT

J3

PIN	DES
1	AC(N)
2	AC(L)
3	GND
4	GND

J4

PIN	DES
1	AC(N)
2	AC(L)

540-1205

J2

PIN	DES
1	N/C
2	+5V DC
3	GND
4	GND
5	-12V DC
6	+12V DC

J1

PIN	NAME
1	LINE
2	N/C
3	NEU/LINE

540-1012-100

J2

PIN	DES
1	+12V DC
2	+12V DC
3	GND
4	GND
5	N/C
6	N/C

J1

PIN	NAME
1	LINE
2	N/C
3	NEU/LINE

540-1012-100

J1

PIN	NAME
1	LINE
2	N/C
3	NEU/LINE

J2

PIN	NAME	COLOR
1	DC +	RED
2	DC +	RED
3	GND	BLK
4	GND	BLK
5	N/C	
6	N/C	

STXLP - 1kW INTERCONNECT DIAGRAM – 597-4102-1

9-19-2012

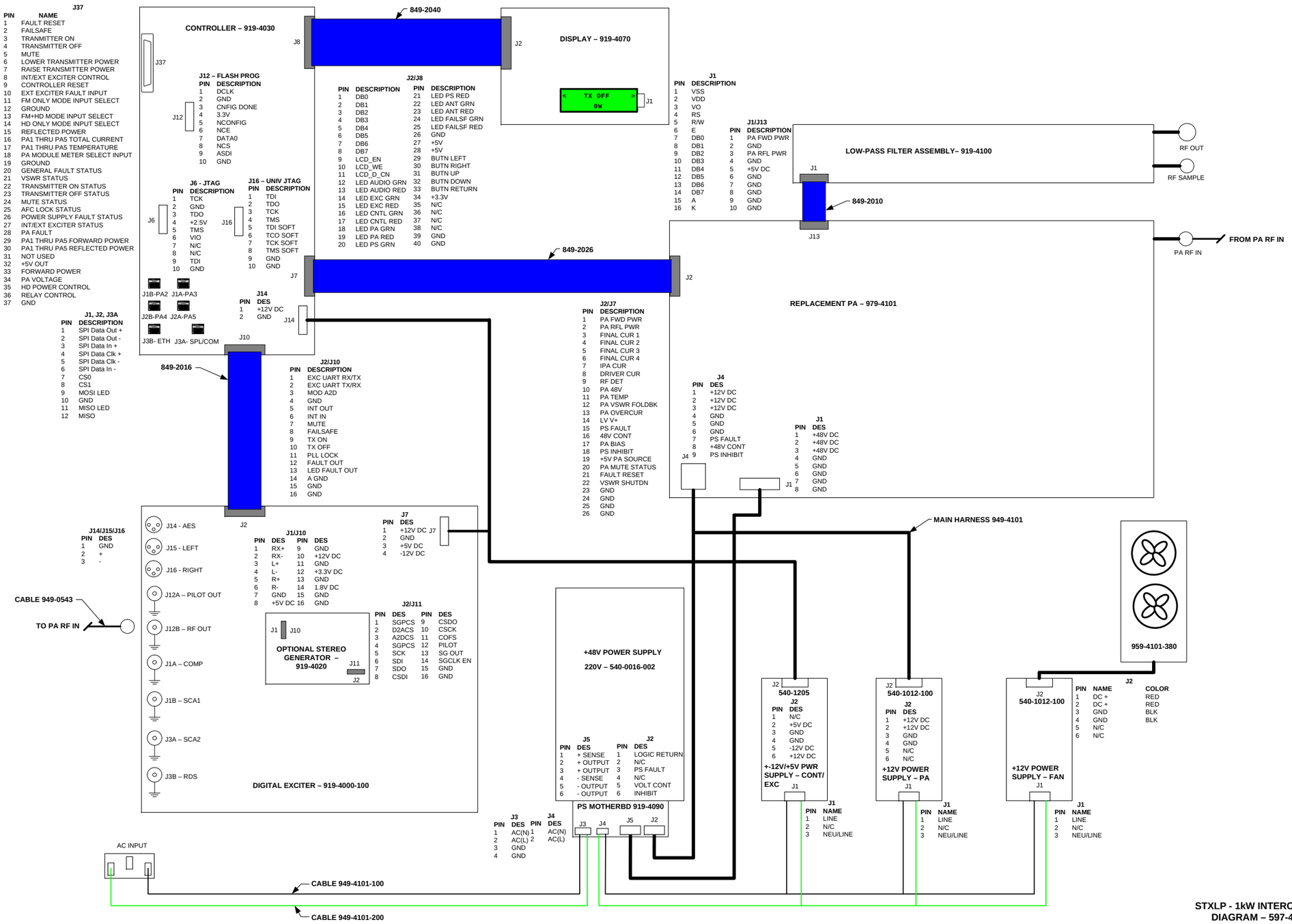

J37

PIN	NAME
1	FAULT RESET
2	FAILSAFE
3	TRANMITTER ON
4	TRANSMITTER OFF
5	MUTE
6	LOWER TRANSMITTER POWER
7	RAISE TRANSMITTER POWER
8	INT/EXT EXCITER CONTROL
9	CONTROLLER RESET
10	EXT EXCITER FAULT INPUT
11	FM ONLY MODE INPUT SELECT
12	GROUND
13	FM+HD MODE INPUT SELECT
14	HD ONLY MODE INPUT SELECT
15	REFLECTED POWER
16	PA1 THRU PA5 TOTAL CURRENT
17	PA1 THRU PA5 TEMPERATURE
18	PA MODULE METER SELECT INPUT
19	GROUND
20	GENERAL FAULT STATUS
21	VSWR STATUS
22	TRANSMITTER ON STATUS
23	TRANSMITTER OFF STATUS
24	MUTE STATUS
25	AFC LOCK STATUS
26	POWER SUPPLY FAULT STATUS
27	INT/EXT EXCITER STATUS
28	PA FAULT
29	PA1 THRU PA5 FORWARD POWER
30	PA1 THRU PA5 REFLECTED POWER
31	NOT USED
32	+5V OUT
33	FORWARD POWER
34	PA VOLTAGE
35	HD POWER CONTROL
36	RELAY CONTROL
37	GND

J1, J2, J3A

PIN	DESCRIPTION
1	SPI Data Out +
2	SPI Data Out -
3	SPI Data In +
4	SPI Data Clk +
5	SPI Data Clk -
6	SPI Data In -
7	CS0
8	CS1
9	MOSI LED
10	GND
11	MISO LED
12	MISO

J12 – FLASH PROG

PIN	DESCRIPTION
1	DCLK
2	GND
3	CNFIG DONE
4	3.3V
5	NCONFIG
6	NCE
7	DATA0
8	NCS
9	ASDI
10	GND

J6 - JTAG

PIN	DESCRIPTION
1	TCK
2	GND
3	TDO
4	+2.5V
5	TMS
6	VIO
7	N/C
8	N/C
9	TDI
10	GND

J16 – UNIV JTAG

PIN	DESCRIPTION
1	TDI
2	TDO
3	TCK
4	TMS
5	TDI SOFT
6	TCO SOFT
7	TCK SOFT
8	TMS SOFT
9	GND
10	GND

J14

PIN	DES
1	+12V DC
2	GND

J2/J8

PIN	DESCRIPTION	PIN	DESCRIPTION
1	DB0	21	LED PS RED
2	DB1	22	LED ANT GRN
3	DB2	23	LED ANT RED
4	DB3	24	LED FAILSF GRN
5	DB4	25	LED FAILSF RED
6	DB5	26	GND
7	DB6	27	+5V
8	DB7	28	+5V
9	LCD_EN	29	BUTN LEFT
10	LCD_WE	30	BUTN RIGHT
11	LCD_D_CN	31	BUTN UP
12	LED AUDIO GRN	32	BUTN DOWN
13	LED AUDIO RED	33	BUTN RETURN
14	LED EXC GRN	34	+3.3V
15	LED EXC RED	35	N/C
16	LED CNTL GRN	36	N/C
17	LED CNTL RED	37	N/C
18	LED PA GRN	38	N/C
19	LED PA RED	39	GND
20	LED PS GRN	40	GND

J1

PIN	DESCRIPTION
1	VSS
2	VDD
3	VO
4	RS
5	R/W
6	E
7	DB0
8	DB1
9	DB2
10	DB3
11	DB4
12	DB5
13	DB6
14	DB7
15	A
16	K

J1/J13

PIN	DESCRIPTION
1	PA FWD PWR
2	GND
3	PA RFL PWR
4	GND
5	+5V DC
6	GND
7	GND
8	GND
9	GND
10	GND

J2/J7

PIN	DESCRIPTION
1	PA FWD PWR
2	PA RFL PWR
3	FINAL CUR 1
4	FINAL CUR 2
5	FINAL CUR 3
6	FINAL CUR 4
7	IPA CUR
8	DRIVER CUR
9	RF DET
10	PA 48V
11	PA TEMP
12	PA VSWR FOLDBK
13	PA OVERCUR
14	LV V+
15	PS FAULT
16	48V CONT
17	PA BIAS
18	PS INHIBIT
19	+5V PA SOURCE
20	PA MUTE STATUS
21	FAULT RESET
22	VSWR SHUTDN
23	GND
24	GND
25	GND
26	GND

J4

PIN	DES
1	+12V DC
2	+12V DC
3	+12V DC
4	GND
5	GND
6	GND
7	PS FAULT
8	+48V CONT
9	PS INHIBIT

J1

PIN	DES
1	+48V DC
2	+48V DC
3	+48V DC
4	GND
5	GND
6	GND
7	GND
8	GND

J2/J10

PIN	DESCRIPTION
1	EXC UART RX/TX
2	EXC UART TX/RX
3	MOD A2D
4	GND
5	INT OUT
6	INT IN
7	MUTE
8	FAILSAFE
9	TX ON
10	TX OFF
11	PLL LOCK
12	FAULT OUT
13	LED FAULT OUT
14	A GND
15	GND
16	GND

J14/J15/J16

PIN	DES
1	GND
2	+
3	-

J1/J10

PIN	DES	PIN	DES
1	RX+	9	GND
2	RX-	10	+12V DC
3	L+	11	GND
4	L-	12	+3.3V DC
5	R+	13	GND
6	R-	14	1.8V DC
7	GND	15	GND
8	+5V DC	16	GND

J7

PIN	DES
1	+12V DC
2	GND
3	+5V DC
4	-12V DC

J2/J11

PIN	DES	PIN	DES
1	SGPCS	9	CSDO
2	D2ACS	10	CSCK
3	A2DCS	11	COFS
4	SGPCS	12	PILOT
5	SCK	13	SG OUT
6	SDI	14	SGCLK EN
7	SDO	15	GND
8	CSDI	16	GND

J5

PIN	DES
1	+ SENSE
2	+ OUTPUT
3	+ OUTPUT
4	- SENSE
5	- OUTPUT
6	- OUTPUT

J2

PIN	DES
1	LOGIC RETURN
2	N/C
3	PS FAULT
4	N/C
5	VOLT CONT
6	INHIBIT

J3

PIN	DES
1	AC(N)
2	AC(L)
3	GND
4	GND

J4

PIN	DES
1	AC(N)
2	AC(L)

540-1205 J2

PIN	DES
1	N/C
2	+5V DC
3	GND
4	GND
5	-12V DC
6	+12V DC

540-1012-100 J2

PIN	DES
1	+12V DC
2	+12V DC
3	GND
4	GND
5	N/C
6	N/C

540-1012-100 J2

PIN	NAME
1	DC +
2	DC +
3	GND
4	GND
5	N/C
6	N/C

J2

COLOR
RED
RED
BLK
BLK

J1

PIN	NAME
1	LINE
2	N/C
3	NEU/LINE

J1

PIN	NAME
1	LINE
2	N/C
3	NEU/LINE

J1

PIN	NAME
1	LINE
2	N/C
3	NEU/LINE

STXLP - 1kW INTERCONNECT DIAGRAM – 597-4102-1

9-19-2012

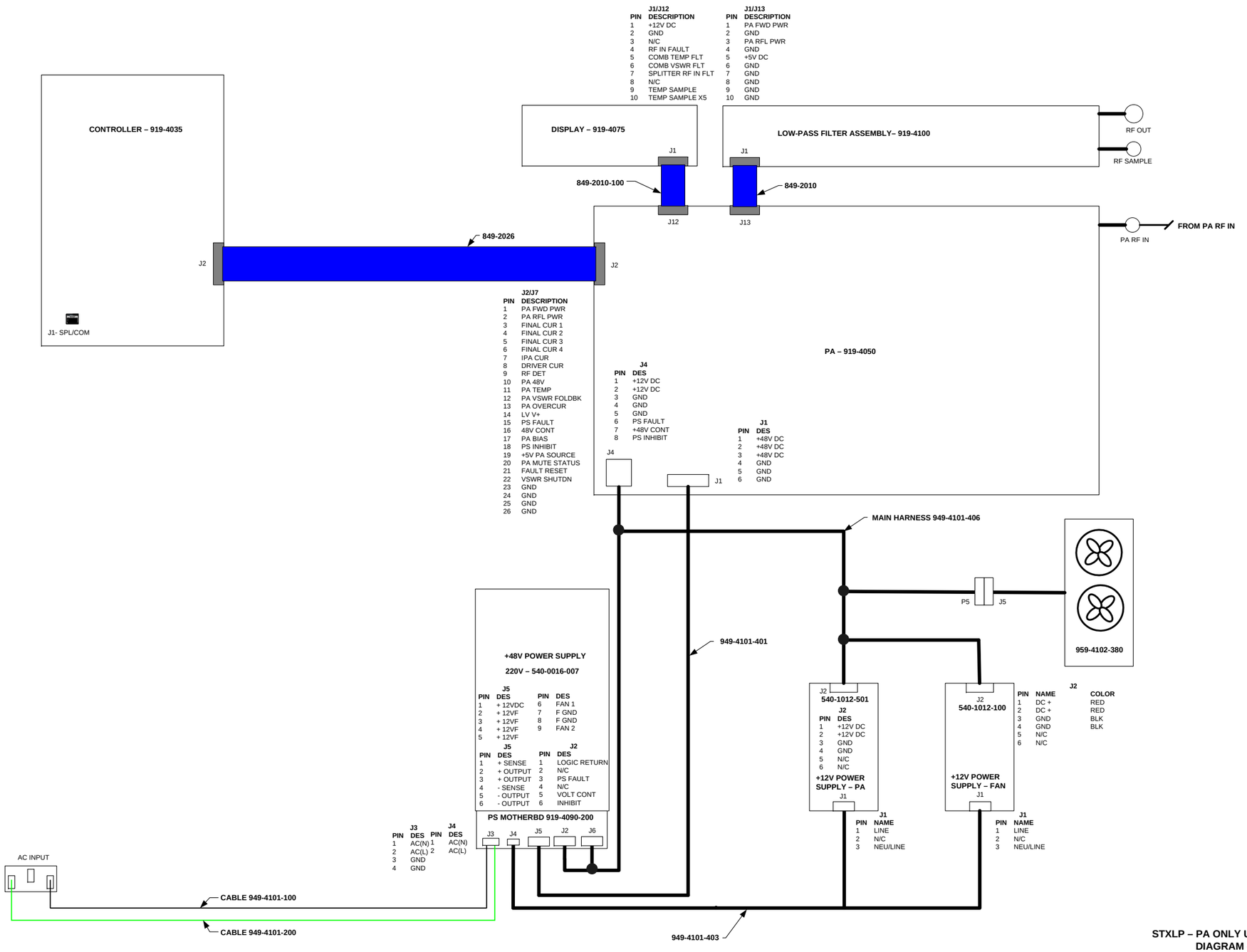

J1/J12

PIN	DESCRIPTION
1	+12V DC
2	GND
3	N/C
4	RF IN FAULT
5	COMB TEMP FLT
6	COMB VSWR FLT
7	SPLITTER RF IN FLT
8	N/C
9	TEMP SAMPLE
10	TEMP SAMPLE X5

J1/J13

PIN	DESCRIPTION
1	PA FWD PWR
2	GND
3	PA RFL PWR
4	GND
5	+5V DC
6	GND
7	GND
8	GND
9	GND
10	GND

J2/J7

PIN	DESCRIPTION
1	PA FWD PWR
2	PA RFL PWR
3	FINAL CUR 1
4	FINAL CUR 2
5	FINAL CUR 3
6	FINAL CUR 4
7	IPA CUR
8	DRIVER CUR
9	RF DET
10	PA 48V
11	PA TEMP
12	PA VSWR FOLDBK
13	PA OVERCUR
14	LV V+
15	PS FAULT
16	48V CONT
17	PA BIAS
18	PS INHIBIT
19	+5V PA SOURCE
20	PA MUTE STATUS
21	FAULT RESET
22	VSWR SHUTDN
23	GND
24	GND
25	GND
26	GND

J4

PIN	DES
1	+12V DC
2	+12V DC
3	GND
4	GND
5	GND
6	PS FAULT
7	+48V CONT
8	PS INHIBIT

J1

PIN	DES
1	+48V DC
2	+48V DC
3	+48V DC
4	GND
5	GND
6	GND

J5

PIN	DES	PIN	DES
1	+ 12VDC	6	FAN 1
2	+ 12VF	7	F GND
3	+ 12VF	8	F GND
4	+ 12VF	9	FAN 2
5	+ 12VF		

J5

PIN	DES
1	+ SENSE
2	+ OUTPUT
3	+ OUTPUT
4	- SENSE
5	- OUTPUT
6	- OUTPUT

J2

PIN	DES
1	LOGIC RETURN
2	N/C
3	PS FAULT
4	N/C
5	VOLT CONT
6	INHIBIT

J3

PIN	DES
1	AC(N)
2	AC(L)
3	GND
4	GND

J4

PIN	DES
1	AC(N)
2	AC(L)

J2

PIN	DES
1	+12V DC
2	+12V DC
3	GND
4	GND
5	N/C
6	N/C

J1

PIN	NAME
1	LINE
2	N/C
3	NEU/LINE

J2

PIN	NAME	COLOR
1	DC +	RED
2	DC +	RED
3	GND	BLK
4	GND	BLK
5	N/C	
6	N/C	

J1

PIN	NAME
1	LINE
2	N/C
3	NEU/LINE

STXLP – PA ONLY UNIT INTERCONNECT DIAGRAM – 597-4102-9

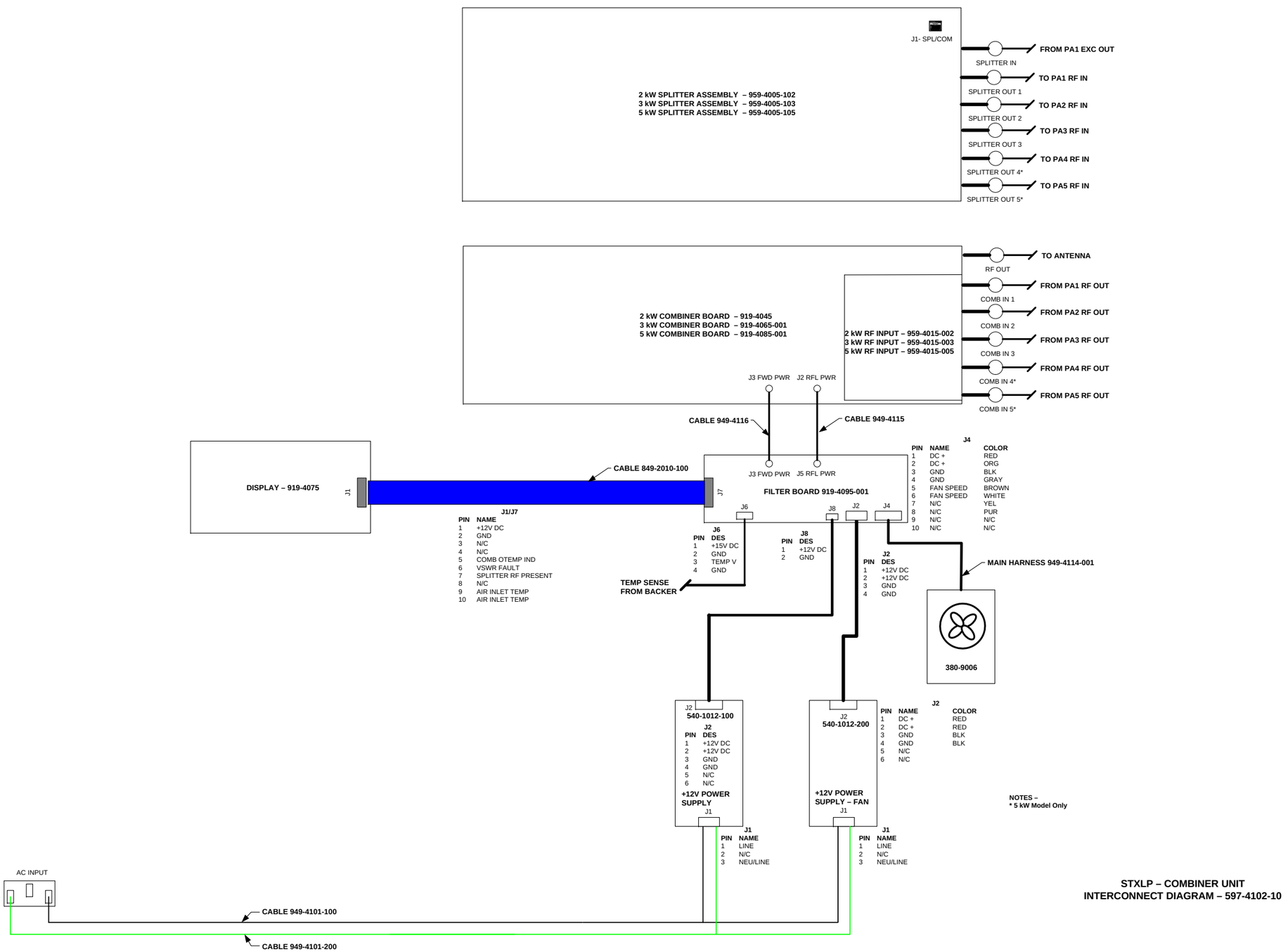

STXLP – COMBINER UNIT
INTERCONNECT DIAGRAM – 597-4102-10

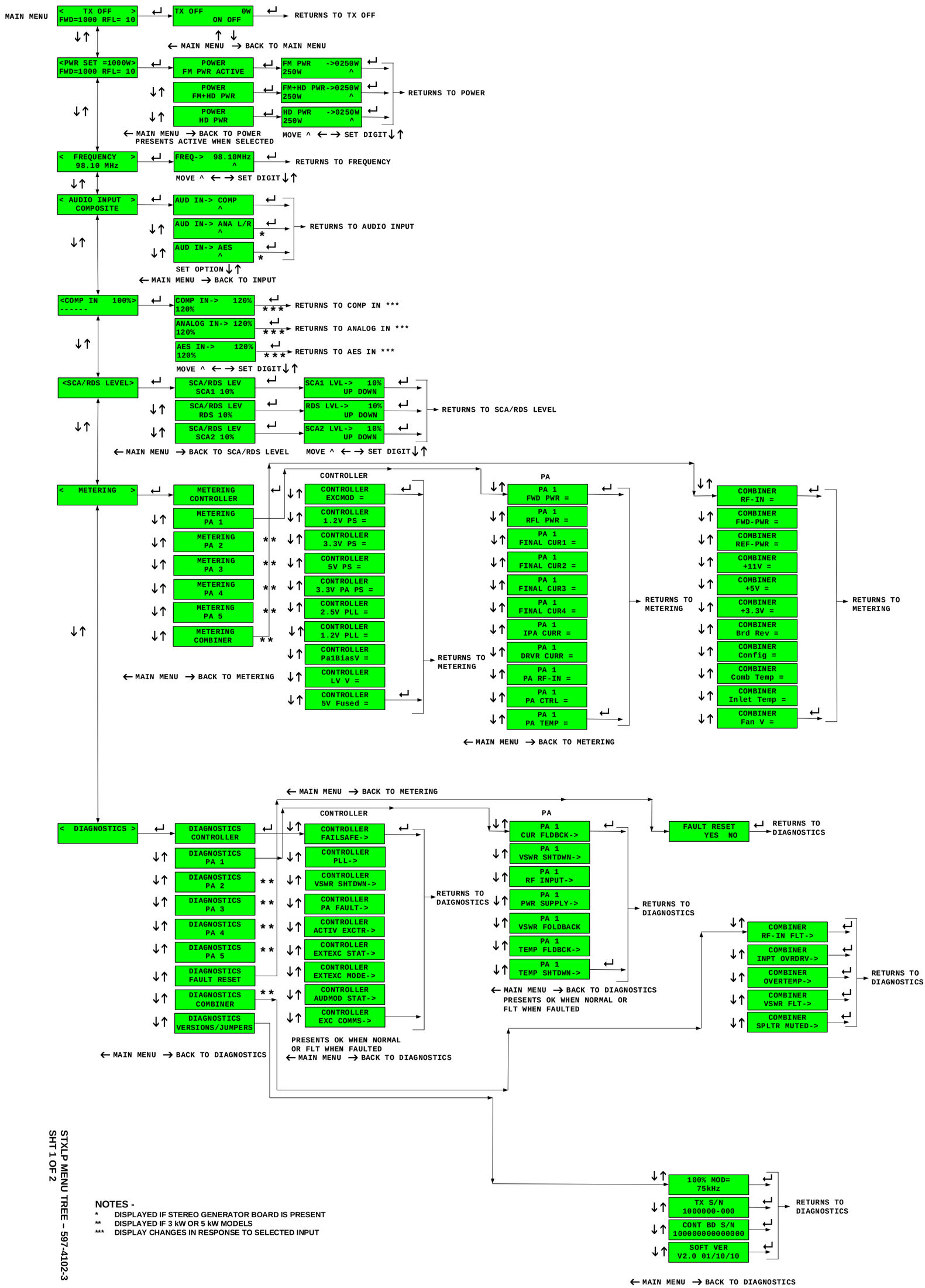

STXLP MENU TREE – 597-4102-3
SHT 1 OF 2

NOTES -

* DISPLAYED IF STEREO GENERATOR BOARD IS PRESENT
** DISPLAYED IF 3 kW OR 5 kW MODELS
*** DISPLAY CHANGES IN RESPONSE TO SELECTED INPUT

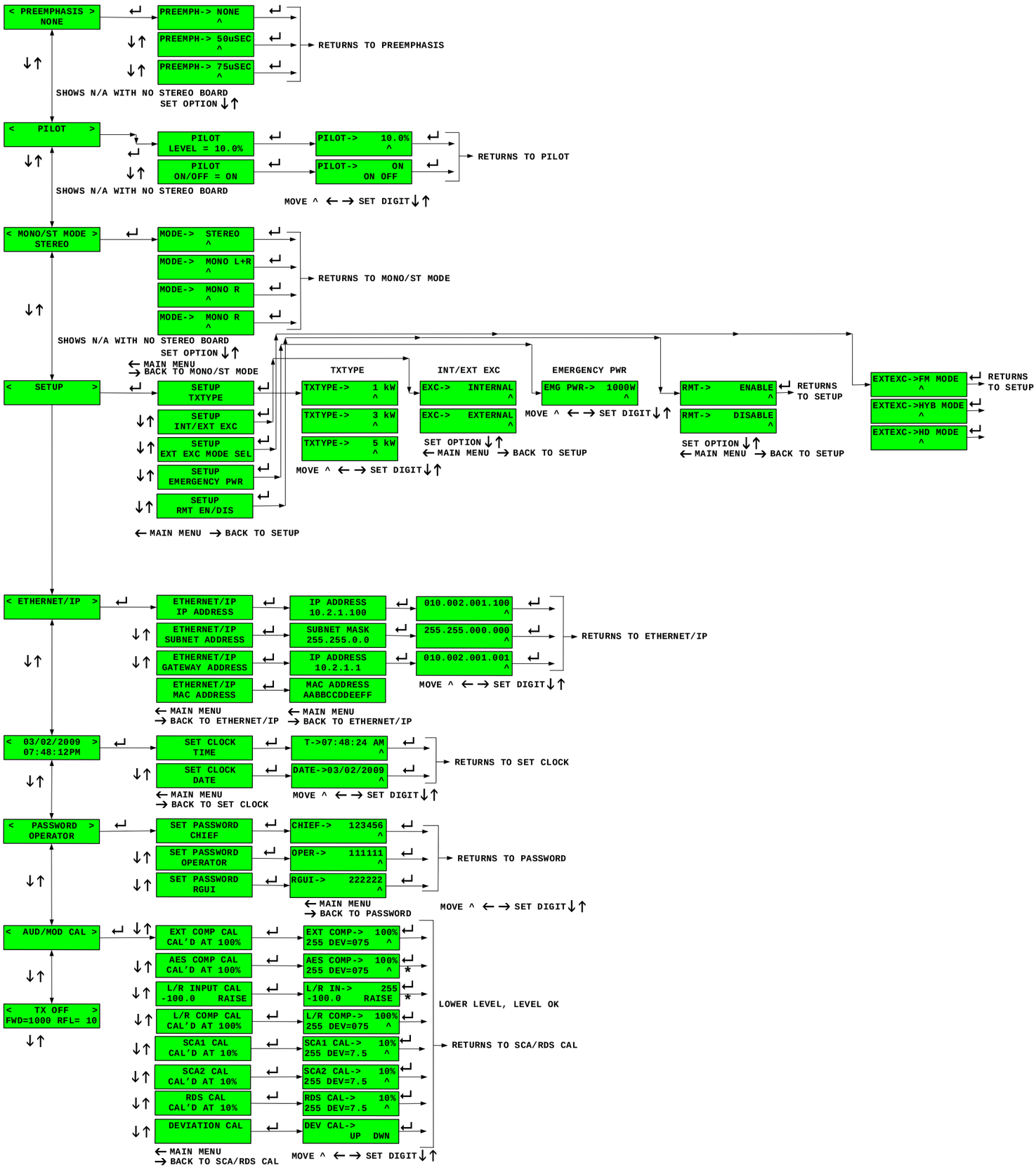

NOTES -

* DISPLAYED IF STEREO GENERATOR BOARD IS PRESENT
** DISPLAYED IF 3 kW OR 5 kW MODELS
*** DISPLAY CHANGES IN RESPONSE TO SELECTED INPUT

STXLP MENU TREE – 597-4102-3
SHT 2 OF 2